THESE ADDENDA WILL REMAIN IN EFFECT UNTIL THE INFORMATION IS PUBLISHED IN AN OFFICIAL DEPARTMENT OF THE ARMY PUBLICATION.

ADDENDA
25 JUNE 1953

ADDENDA NO. 4 TO INSTRUCTION BOOK FOR RADIO TRANSMITTER T-278/U AND RADIO TRANSMITTER T-416/GR

The following information, published on Order No. 11661-Phila-52, provides information to be added to the instruction book. These addenda supersede Addenda No. 1, 30 March 1953, Addenda No. 2, 15 May 1953, and Addenda No. 3.

Personnel using this equipment and having custody of these addenda will enter suitable notations beside each affected paragraph and figure in the instruction book to indicate the presence of this supplementary information.

Change "Case CY-1221/U" to read: Electrical Equipment Cabinet CY-1221/G, wherever it appears in the instruction book.

Change the type designation of tube V502 from "5894A" to read: 5894, wherever it appears in the instruction book.

Change "Power Supply PP-640/U" to read: Dynamotor-Power Supply DY-100/U, wherever it appears in the instruction book.

Change "Case CY-938/U" to read: Electrical Equipment Cabinet CY-938/VRC, wherever it appears in the instruction book.

Delete capacitors "C464" and "C465", wherever they appear in the instruction book.

Change the value of R410 from "10" to 15, wherever it appears in the instruction book.

Delete resistor R473, 4700 ohms, and replace it with r-f choke L411, 1.5 UH, in the following places in the instruction book:

Page 32. Fig. 19.
Page 38. Fig. 24.
Page 52. Fig. 29.
Page 73. Fig. 42.

Change "Radio Transmitter T-278( )/U" to read: Radio Transmitter T-278/U, wherever it appears in the instruction book.

Change the power output of Radio Transmitter T-278/U from "30 watts" to 25 watts, wherever it appears in the instruction book.

Change the power output of Radio Transmitter T-416/GR from "50 watts" to 45 watts, wherever it appears in the instruction book.

Change "HR 401" to read: E401, wherever it appears in the instruction book.

Change "patch cord" to read: Special Purpose Electrical Cable Assembly CX-2371/U (patch cord), wherever it appears in the instruction book.

Change the value of C463 from "500" to 510, wherever it appears in the instruction book.

Page 2. Fig. 2. Make the following changes in the block diagram for Radio Set AN/VRC-19(*), change "Electrical Equipment Cabinet CY-1221/G" to read: Electrical Equipment Cabinet CY-938/VRC.

In the block diagram for Radio Set AN/TRC-28, change "Amplifier AM-494/GR" to read: Radio Frequency Amplifier AM-494/GR.

Page 3. Par. 5. Opposite "Spurious emission", change "attenuated at least 70" to read: attenuated at least 50.

Page 4. Par. 5b. Opposite "Power supply", change "external d-c (direct-*** to Dynamotor DY-98/U" to read: External d-c (direct-current) operated Dynamotor-Power Supply DY-93/G, Dynamotor-Power Supply DY-98/G, or Dynamotor-Power Supply DY-100/U.

Page 7. Par. 16. Make the following changes in the "function" column.

12 lines from the bottom, change "Provides MIN and MAX coupling" to read: Provides adjustment of coupling.

10 lines from the bottom change "Acts as the antenna loading adjustment" to read: Acts as the antenna tuning adjustment.

3 lines from the bottom, add the following at the end of the sentence: (between two tubes or the sections of one tube).

Page 8. Par. 18d. Change "antenna to antenna" to read: antenna or r-f wattmeter to antenna.

Page 12. Par. 19. Make the following changes in paragraph 19:

In subparagraph c, line 9, change "two-thirds" to read: nine-tenths and on line 10, change "-3.5" to read: -5.

In subparagraph f, line 4, change "-75" to read: -70.

In subparagraph j, change "connect a voltmeter (1000 ohms per volt or better)" to read: Connect a voltmeter (1000 ohms per volt or better or a 1/4-ampere ammeter with .5 ohm or less resistance).

In subparagraph i, add the following at the end of the CAUTION: When using a voltmeter with a metal case across the PL CUR jacks, make sure that you do not touch the case of the meter. Both jacks are above ground potential.

Page 13. Par. 23a. Line 3. Delete "one oscillator tube filament and".

Page 14. Par. 27. Add the following "Caution" after subparagraph b:

Caution: Be sure to keep all dust covers tight and all cable entrances sealed to keep out dust.

Page 21. Par. 41e. Item 12. Normal condition column. Change "Filament power to oscillator tube and power to crystal heater" to read: Power to crystal heater is removed.

Page 23. Par. 43a(2). Line 11. Add the following to the last sentence: at 1,000 cycles modulating frequency.

Page 25. Par. 44d. Line 8. Change "C402, C403, and C465" to read: C402 and C403.

Page 25. Par. 44f. Delete the last sentence.

Page 26. Par. 45a. Lines 7 and 8. Delete "d-c blocking", and line 9, change "180°" to read: 90°.

Page 27. Figure 15. Make the following changes:

Add "**560K" below "R414 680K".

Add the following to the notes:

3. RESISTOR R414 IS 560K IN RADIO TRANSMITTER T-416/GR, BEGINNING WITH SERIAL NO. 1, AND IS 560K IN RADIO TRANSMITTER T-278/U BEGINNING WITH SERIAL NO. 496.

Page 27. Par. 46. Add the following to the end of the third sentence:

At 1,000 cycles modulating frequency.

Page 28. Fig. 16. Make the following changes in figure 16: Add the following to the notes:

3. *INDICATES VALUE OF COMPONENT IN RADIO TRANSMITTER T-416/GR.

ADD "*2200" AFTER "R421 1500", "R471 1K", AND "R422 1500".

4. **RESISTOR R414 IS 560K IN RADIO TRANSMITTER T-416/GR, BEGINNING WITH SERIAL NO. 1, AND IS 560K IN RADIO TRANSMITTER T-278/U BEGINNING WITH SERIAL NO. 496.

Add "**560K" below "R414 680K".

Page 30. Fig. 18. Make the following changes in figure 18:

Delete "C504 1500", above "R501 22K", and replace it below "R501 22K".

Change the values of R505 from "1500" to 2200 and R503 from "47K" to 15K.

Change "S501" to read: S502.

Page 31. Par. 47a. Lines 6 and 7. Delete "Resistors R440 and R473" substitute resistor R440 and r-f choke L411.

Line 9. Delete "Resistors R473 and" substitute resistor R439 and r-f choke L411.

Page 33. Fig. 20. Make the following changes in figure 20:

Change "R503 47K" to 15K, "R506 2200" to 22K and "R505 1500" to 2200.

Change "L506" to read: L506A, "L508" to read: L506B and remove the ground symbol from both.

Remove the left-hand wire, connecting C511, from ground, and connect it to pin 5 of V502. Ground the right-hand wire.

Page 34. Fig. 21. Make the following changes in figure 21: Reverse the reference symbols of R458 and R474 but leave the values as they are.

Add "See Note 3" at terminal 1 of transformer T401.

Add the following to the notes:

3. STARTING AT SERIAL NO. 1 OF RADIO TRANSMITTER T-416/GR, AND SERIAL NO. 601 OF RADIO TRANSMITTER T-278/U, THE GROUND SYMBOL IS REMOVED FROM TERMINAL 1 OF TRANSFORMER T401, AND A LEAD IS CONNECTED TO THE JUNCTION OF RESISTOR R434 AND CAPACITOR C426 NOT SHOWN ON SCHEMATIC.

Page 34. Par. 49. Line 17. Change "R458" to read: R474, and change "R474" to read: R458.

Page 35. Fig. 22. Make the following changes in figure 22:

Add the following to the notes:

NOTE 4. * INDICATES DIFFERENCE OF VALUE OF COMPONENTS IN RADIO TRANSMITTER T-416/GR.

5. BEGINNING WITH SERIAL NO. 1. OF RADIO TRANSMITTER T-416/GR, AND SERIAL NO. 601 OF RADIO TRANSMITTER T-278/U, THE LEAD BETWEEN TERMINAL 15 OF PLUGS P501, P401 AND R434 IS REMOVED AND CONNECTED TO TERMINAL 1 OF TRANSFORMER T401, WHICH IS REMOVED FROM GROUND.

Add "*2200" after "R421 1500", "R471 1K", and "R422 1500".

Change "R503" from "47K" to 15K and "R505" from "1500" to 2200.

Change "L506" to read: L506A, "L508" to read: L506B, and remove the ground symbol from both.

Delete the wire between pins 1 and 2 of V411, and insert R458 100K between pin 2 of V411 and the junction of R463, R462, and C462.

Delete "R458 470K" and the wire from pin 2 of V412, and insert a wire between pins 1 and 2 of V412.

Add "See Note 5" at terminal 15 of plug P501, P401.

Page 37. Fig. 23. Lower right-hand corner. Change terminal "7" of TB801 to read: 8, "29" at J803 and P252 to read: 28.

Page 38. Fig. 24. Make the following changes in figure 24:

Add "**560K" below "R414 680K".

Change "NOTE" to read: NOTES:, and put a 1. before the existing note, then add the following:

2. **RESISTOR R414 IS 560K IN RADIO TRANSMITTER T-416/GR BEGINNING WITH SERIAL NO. 1 AND IN RADIO TRANSMITTER T-278/U BEGINNING WITH SERIAL NO. 496.

Change R504 "3300" to read: 4700.

Page 39. Par. 52. Make the following changes in paragraph 52:

Add the following at the end of subparagraph c: On serial numbers 1 thru 600 on Radio Transmitter T-278/U only.

Add subparagraph d after subparagraph c.

d. On Radio Transmitter T-416/GR beginning with serial No. 1, and on Radio Transmitter T-278/U beginning with serial No. 601, the final +2 volts d-c output at the voltage divider is connected to terminal 1 of transformer T401 to supply the microphone current.

Page 40. Fig. 25. Note 2. Item 3. Change "Power Supply PP-869/U" to read: Dynamotor-Power Supply DY-100/U.

Page 48. Par. 64. Transformer or coil column. Add the following between "L401 & L412": L411 - - - - .1 (continuity).

Page 49. Fig. 26. Make the following changes in figure 26: Change "P436" to read: C436.

Change "R411" (called out between C418 and C419), to read: R416.

Page 50. Fig. 27. Make the following changes in figure 27: Reverse reference symbols "V410" and "V409".

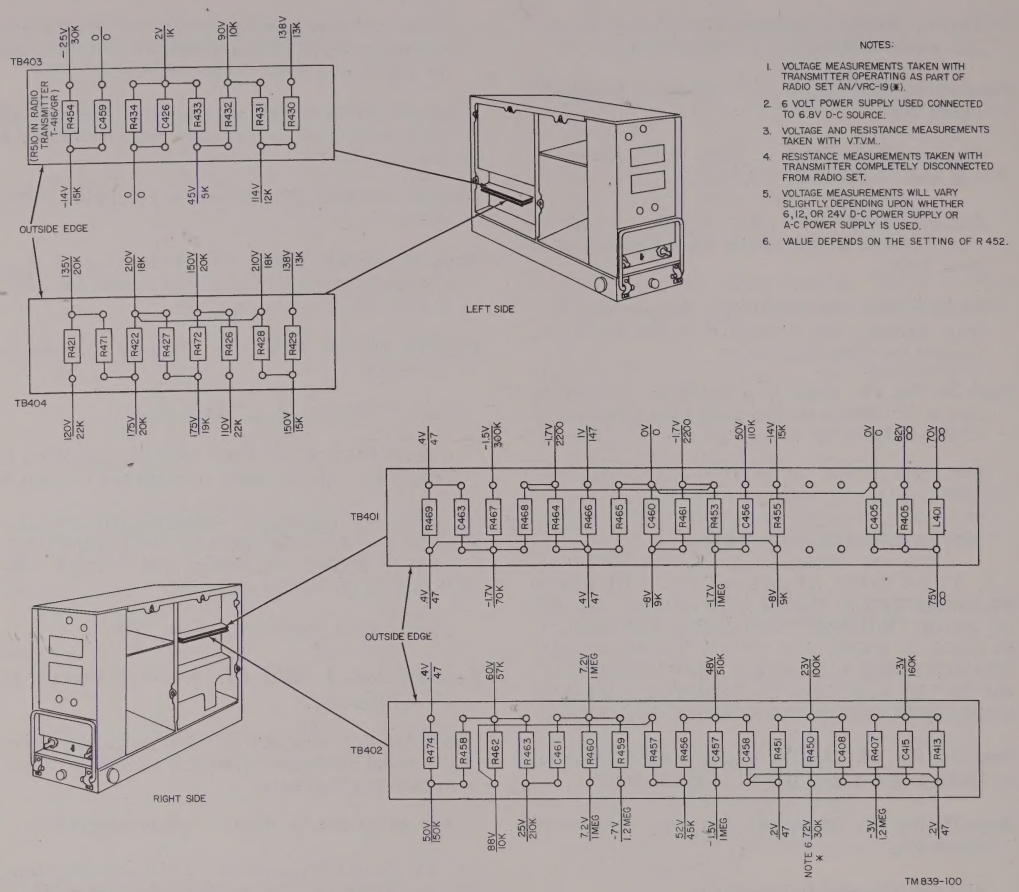
NOTES:
1. VOLTAGE MEASUREMENTS TAKEN WITH TRANSMITTER OPERATING AS PART OF RADIO SET AN/VRC-19(*).
2. 6 VOLT POWER SUPPLY USED CONNECTED TO 6.8V D-C SOURCE.
3. VOLTAGE AND RESISTANCE MEASUREMENTS TAKEN WITH VTVM.
4. RESISTANCE MEASUREMENTS TAKEN WITH TRANSMITTER COMPLETELY DISCONNECTED FROM RADIO SET.
5. VOLTAGE MEASUREMENTS WILL VARY SLIGHTLY DEPENDING UPON WHETHER 6, 12, OR 24V D-C POWER SUPPLY OR A-C POWER SUPPLY IS USED.
6. VALUE DEPENDS ON THE SETTING OF R 452.
TB403
TB404
TB401
TB402
OUTSIDE EDGE
LEFT SIDE
RIGHT SIDE
TM 839-100

Figure 36. Radio Transmitter T-278/U and T-416/GR voltages and resistances at terminal boards.

Change "C418" to read: C412.

Page 52. Fig. 29. Add the following to figure 29: Place an arrow with the callout C428 pointing just below the lower left-hand corner of C429.

Place an arrow with the callout C440 pointing between sockets XV409 and XV410.

Page 53. Fig. 30. Change "Z406" to read: Z407, and "C449" to read: C445.

Page 55. Fig. 33. Change "J503" to read: J504 and "J504" to read: J503.

Page 56. Fig. 34. Change "Z406" to read: Z407.

Page 57. Fig. 35. Make the following changes in figure 35: Change "430V" at plates of tube V502, to read: 480V.

Change "45K" at pin 5 of tubes V409 and V410 to read: 40K.

Change "20K" at pin 7 of tube V406 to read: V411.

Page 59. Fig. 36. Delete figure 36 and substitute the new figure 36.

Page 73. Fig. 42. Make the following changes in figure 42: Reverse the reference symbols of R458 and R474 but leave the values as they are.

Change the values of C429, C437, C439, and C451 from "25" to 4-23.

Add "*560K" below "R414 680K".

Add the following to the notes:

3. R414 IS *560K ON EQUIPMENTS BEGINNING WITH SERIAL NO. 496.

4. ON EQUIPMENTS BEGINNING WITH SERIAL NO. 601, REMOVE THE LEAD BETWEEN PIN 15 OF PLUG P401 AND THE JUNCTION OF R434 and C426, AND REMOVE THE GROUND FROM TERMINAL 1 OF TRANSFORMER T401. CONNECT A LEAD BETWEEN TERMINAL 1 OF TRANSFORMER T401 AND THE JUNCTION OF R434 AND C426.

Page 75. Fig. 43. Make the following changes in figure 43: Change "R421 1500", "R471 1K", "R422 1500", and "R505 1500" to read: 2200.

Change "R503 47K" to read: 15K.

Change "L506" to read: L506A, "L508" to read: L506B and delete the ground symbols from both.

Reverse the reference symbols of R458 and R474 but leave the values as they are.

Change the value of C502, C508, C509, and C517 from "25" to 4-23.

Change "+450" at pin 4 of P501 to read: +500.

Change "R414 680K" to read: 560K.

Change "R504", "3300" to read: 4700.

Delete pin 15 of plug P501 and the lead going to the junction of R434 and C426, and remove the ground from terminal 1 of transformer T401, connect a lead between terminal 1 of transformer T401 and the junction of R434 and C426.

Page 77. APP. II. Par. 2. Make the following changes in paragraph 2: Item 1. "Description" column. Line 3. Change "225 w dc" to read: 225 v dc and "200 w dc" to read: 200 v dc. In "Function of part" column, change 19Z to read: 19.

Item H450, H451, Description column. First sentence. Change "silver plarhodium" to read: silver pl and rhodium.

Item TB405, E406 change "E406" to read TB406.

Page 78. Item C401, C402. Description column. Change "±10%" to read: ±5%, and in function column, change "feedback" in C401 and C402 function to read: bypass.

Item C410. Function column. Change the function to read: Part of V403 plate load.

Item C412, *** C441. Description column. "+100%-0" to read: +100%-0%.

Page 79. Item C447, C448. Change "C448" in reference symbol and function columns to read: C449. Description column. Change "+100%-0" to read: +100%-0%.

Item C455. Description column. Change "8 uuf ±1%" to read: 8uuf ±1 uuf.

Item C456. Description column. Change "240 uuf" to read: 250 uuf. Change the stock No. to read: 3D9250-33.

Item C408 *** C461. Function column. Change the function to read: C415: Part of grid bias filter for V403 and V405.

Page 80. Item C403, C404. Description column. Second line. Change "850v a-c peak" to read: 600 v a-c peak.

Item C429, C409. Delete C409 in reference symbol and function columns. Change the function of C429 from "driver grid tuning" to read: DRIVER GRID TUNE.

Add "C437 and C439", as part of C429, in reference symbol column and add the following information in the function column:

C437: V410 grid tuning. C439: V409 grid tuning.

Item H497. Delete entire information for H497.

Item H440, H441. Add H559 in reference symbol column, and in description column, change, "ethyl cellulose acetate" to read: black saran plastic.

Item E421. Reference symbol column. Change "E421" to read: L412.

Page 81. Item L407. Function column. Change "l-c tuned" to read: L-c tuned.

Item L408, L411. Function column. Change the function of L411 to read: L411: V409 and V410 grid bias r-f choke.

Item Z401. Description column. Lines 3 and 4. Change ".263 in. dia approx." to read: .251 in. dia max.

Item P402. Reference symbol column. Add P403 after P402, and in description column, delete the information and substitute the following: CONNECTOR, plug: male, round; 31/32 in. lg x 27/64 in. dia; 52 ohms nom impedance.

Page 82. Item P401. Description column. Change the last line to read: 2-40 amp. 2 coaxial-10 amp.

Item H442. Delete the entire information for H442.

Item C440. Description column. Line 1. Change "MOUNTING" to read: PLATE, capacitor:

Page 83. Item HR401. Description column. Change the description to read: OVEN, crystal: 75° C min oven temp -40 to 75° C ambient temp, ±5° C; a-c 6.3 or 24 v, 60 cyc, single ph. 6.5 w; d-c 6.3 v or 24 v, 405 ma; aluminum case; 1-11/16 in. h x 1-1/4 in. dia.

Item A410. Description column. Change "±.101" to read: ±.010.

Item R401, R402, R462. Reference symbol and function columns. Delete the information for R401 and R402.

Item R403 * * * R474. Reference symbol and function columns. Delete the information for R403, R404, and change "R474" to read: R458 in the reference symbol and function columns.

Item R457. Reference symbol and function column. Delete the information for R457.

Page 84. Item R408, R412. Description column. Change "1/2 w" to read: 1/4 w, and change the stock No. to read: 3RC10BF103K.

Item R410. Description column. Change "10 ohms" to read: 15 ohms, and change the stock No. to read: 3RC30BF150K.

Item R417. Description column. Change "1/2 w" to read: 1/4 w, and change the stock No. to read: 3RC10BF472K.

Add the following after the information for R414:

Ref. symbol	Name of part and description	Function of part	Signal Corps stock No.
R414 (on equipment with serial No. beginning with 496)	RESISTOR, fixed: comp; 560,000 ohms ±10%; 1/2 w.	V405 control grid bias.	3RC20BF564K
R457	RESISTOR, fixed: comp; 33,000 ohms, ±10%; 1/2 w.	V412 plate voltage dropping.	3RC20BF333K

Page 85. Item R440. Description column. Change "15,000" to read: 10,000, and "1 w" to 1/2 w, and change the stock No. to read: 3RC30BF103K.

Delete the information beginning with R454 through the end of the page and substitute the following:

Ref. symbol	Name of part and description	Function of part	Signal Corps stock No.
R454, R401, R402	RESISTOR, fixed: comp; 15,000 ohms ±10%; 1/2 w.	R454: -22 volts voltage-dropping resistor at C459. R401 and R402: Parts of V401 and V402 input balance.	3RC20BF153K
R455, R461	RESISTOR, fixed: comp; 6,800 ohms ±10%; 1/2 w.	R455: -22 volts voltage-dropping resistor at C459. R461: -22 volts voltage-dropping resistor at C460.	3RC20BF682K

Ref. symbol	Name of part and description	Function of part	Signal Corps stock No.
R456, R474, R403, R404	RESISTOR, fixed: comp; 470,000 ohms ±10%; 1/2 w.	R456: V413 control grid coupler. R474: V412 screen grid feedback limiter. R403: V403 suppressor grid bypass. R404: V404 suppressor grid bypass.	3RC20BF474K
R464	RESISTOR, fixed: comp; 2,200 ohms ±10%; 1/2 w.	V411 cathode voltage dropping.	3RC20BF222K
R465	RESISTOR, fixed: comp; 47 ohms ±10%; 1/2 w.	V411 cathode voltage dropping.	3RC20BF470K
R466	RESISTOR, fixed: comp; 100 ohms ±10%; 1/2 w.	V411 cathode voltage dropping resistor.	3RC20BF101K
R468, R469	RESISTOR, fixed: comp; 68,000 ohms ±10%; 1/2 w.	R468: V413 feedback control. R469: T401 secondary impedance balance shunt.	3RC20BF683K

Page 86. Item H435 * * * H478. Reference symbol column. Change "H478" to read: H479.

Item H488 thru H495. Description column. Change the description to read: RING, retainer: brass; .423 in. lg x .230 in. wd x .050 in. thk o/a.

Item H444. Description column. Change the description to read: BOLT, machine: steel; 8/32 thk; 5-1/2 in. nom lg.

Page 87. Item XCH425, XHR401, XV408. Reference symbol and description columns: Change "XHR401" to read: XE401.

Item H453. Function column. Line 1. Change "Mountain" to read: Maintains.

Page 88. Item E401 thru E403. Change "E401 thru E403" to read: E402, E403.

Page 89. App. II. Par. 3. Make the following changes for paragraph 3:

In the transmitter description column add: "Radio Transmitter T-416/GR" after "No. 201V1148."

Item C401, C402, C503. Reference symbol and function columns. Delete the information for C503 as part of C401 and C402, and insert it below C411 as part of that item.

Page 90. Item C455. Description column. Change "±1%" to read: ±1 uuf.

Page 91. Item C456. Description column. Change "240 uuf" to read: 250 uuf, and change the stock No. to read: 3D9250-33.

Item C408 *** C461. Function column. Change the function for "C415" to read: C415: Part of grid bias filter.

Item C403, C404, C508. Description column. Line 2. Change "850 v" to read: 600 v, and delete C508 from the reference symbol and function columns.

Page 92. Item Z401. Description column. Line 3. Change "263" to read: .251.

Page 93. Item P401. Description column. Line 3. Delete: "110 v ac".

Item P402, P403. Description column. Change the description to read: CONNECTOR, plug: 1 male, round cont; 31/32 in. lg x 27/64 in. dia; 52 ohms nom impedance.

Item HR501. Reference symbol column. Change "HR501" to read: E501, and change the description to read: OVEN, crystal: 1 xtal unit: 75°C min oven temp, -40 to 75° C ambient temp, ±5° C; ac, 6.3 v or 24 v, 60 cyc, single ph, 6.5

w; dc, 6.3 v or 24 v, 405 ma; 1-11/16 in. h x 1-1/4 in. dia.

Page 94. Item R406, R413, R457, R463. Reference symbol and description column. Delete R457.

Change the following items between K401 and R405 *** to read:

Ref. symbol	Name of part and description	Function of part	Signal Corps stock No.
R403, R404, R462	RESISTOR, fixed: comp; 4,700 ohms ±10%; 1/2 w.	R403: V403 suppressor grid bypass. R404: V404 suppressor grid bypass. R462: V411 plate voltage dropping.	3RC20BF473K
R411, R418, R423, R451, R458	RESISTOR, fixed: comp; 100,000 ohms ±10%; 1/2 w.	R411: V404 screen grid voltage dropping. R418: V406 control grid bleeder. R423: V407 control grid bleeder. R451: V413 screen and control grid voltage dropping. R458: V411 screen dropping.	3RC20BF104K
R457	RESISTOR, fixed: comp; 33,000 ohms ±10%; 1/2 w.	V412 voltage dropping.	3RC20BF333K

Page 95. Item R410. Description column. Change "10 ohms" to read: 15 ohms, and change the stock No. to read: 3RC30BF150K.

Item R414. Description column. Change "680,000 ohms ±10%" to read: 560,000 ohms ±5%, and change the stock No. to read: 3RC20BF560J.

Change the items between item R417 and R432, R433 to read:

Ref. symbol	Name of part and description	Function of part	Signal Corps stock No.
R426, R427, R430, R431	RESISTOR, fixed: comp; 1500 ohms ±10%; 2 w.	R426, R427: V407 screen grid bias voltage dropping. R430, R431: V406 and V407 screen grid bias voltage dropping.	3RC42BF152K
R421, R422, R428, R429, R505	RESISTOR, fixed: comp; 2200 ohms ±10%; 2 w.	R421, R422: V406 screen grid voltage dropping. R428, R429: V406 and V407 screen grid voltage dropping. R505: V502 screen grid voltage dropping.	3RC42BF222K

Change the items between items R450, R459, R467 and R455, R461 to read:

Ref. symbol	Name of part and description	Function of part	Signal Corps stock No.
R401, R402, R510	RESISTOR, fixed: comp; 15,000 ohms ±10%; 1/2 w.	R401, R402: Part of V401 and V402 input balance. R510: Minus 22-volt bias dropping.	3RC20BF153K
R456, R474, R502	RESISTOR, fixed: comp; 470,000 ohms ±10%; 1/2 w.	R456: V413 control grid coupler. R474: V412 screen grid voltage dropping. R502: Metering jack J501 voltage dropping.	

Page 96. Change the items at the beginning of the page item R471, R472 to read:

Ref. symbol	Name of part and description	Function of part	Signal Corps stock No.
R464	RESISTOR, fixed: comp; 2200 ohms ±10%; 1/2 w.	V411 cathode voltage dropping.	3RC20BF222K
R466	RESISTOR, fixed: comp; 100 ohms ±10%; 1/2 w.	V411 cathode voltage dropping.	3RC20BF101K
R465	RESISTOR, fixed: comp; 47 ohms ±10%; 1/2 w.	V411 cathode voltage dropping.	3RC20BF470K
R468, R469	RESISTOR, fixed: comp; 68,000 ohms ±10%; 1/2 w.	R468: V413 feedback control. R469: T401 secondary impedance balance shunt.	3RC20BE683K
R471	RESISTOR, fixed: comp; 2200 ohms ±10%; 2 w.	V406 screen grid voltage dropping.	3RC42BF222K
R472	RESISTOR, fixed: comp; 1000 ohms ±10%; 2 w.	V407 screen grid voltage dropping.	3RC42BF102K

Item R501. Description column. Change 22,00 ohms" to read: 22,000 ohms.

Item R503. Description column. Change "47,000 ohms" to read: 15,000 ohms, and change the stock No. to read: 3RC30BF153K.

Item R504. Description column. Change "3300 ohms" to read: 4700 ohms, and change the stock No. to read: 3RC30BF472K.

Item H488 thru H495: Description column. Change the description to read: RING, retainer: brass; .423 in. lg x .230 in. wd x .050 in. thk o/a.

Page 97. Item XC425, XHR401, XV408. Reference symbol and description columns. Change "XHR401" to read: XE401.

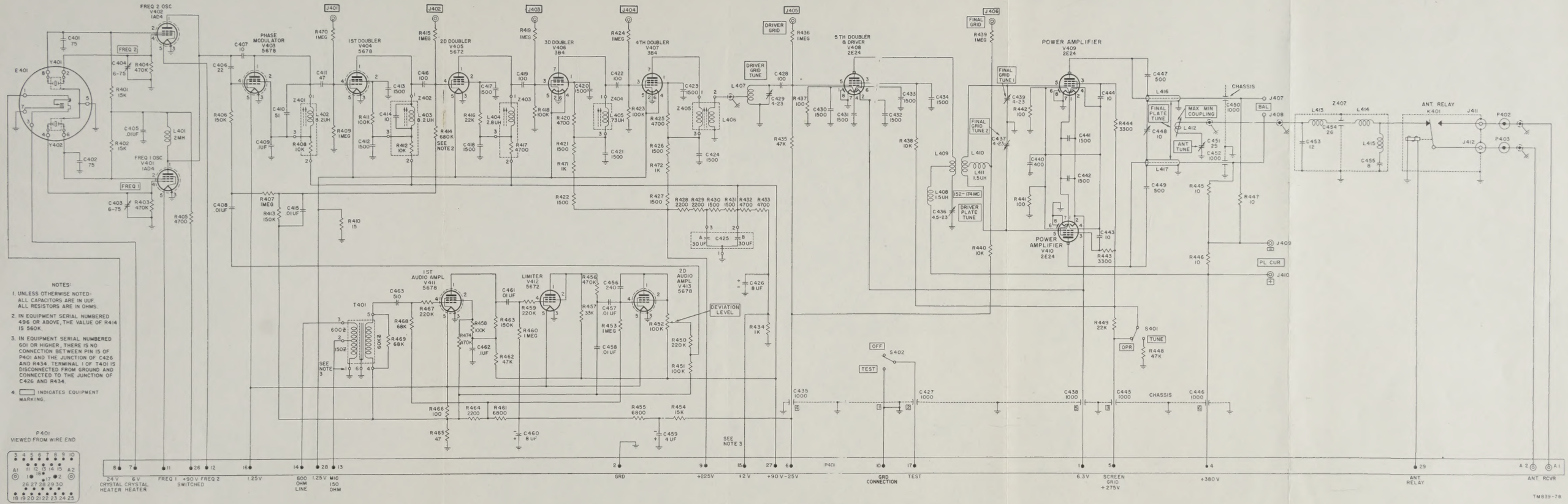

NOTES:

1. UNLESS OTHERWISE NOTED: ALL CAPACITORS ARE IN UUF. ALL RESISTORS ARE IN OHMS.
2. IN EQUIPMENT SERIAL NUMBERED 496 OR ABOVE, THE VALUE OF R414 IS 560K.
3. IN EQUIPMENT SERIAL NUMBERED 601 OR HIGHER, THERE IS NO CONNECTION BETWEEN PIN 15 OF P401 AND THE JUNCTION OF C426 AND R434. TERMINAL 1 OF T401 IS DISCONNECTED FROM GROUND AND CONNECTED TO THE JUNCTION OF C426 AND R434.
4. ☐ INDICATES EQUIPMENT MARKING.

Figure 48. Radio Transmitter T-278/U, schematic diagram.

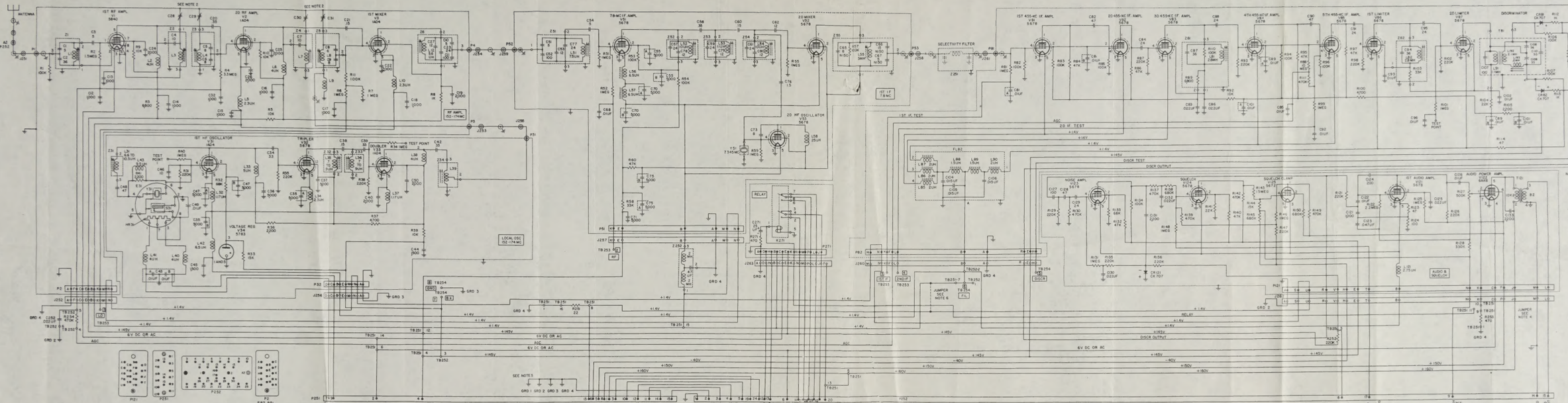

NOTES:

1. UNLESS OTHERWISE SHOWN, RESISTORS ARE IN OHMS, CAPACITORS ARE IN UUF.
2. CAPACITORS C15 THROUGH C31 ARE SMALL BASSE CARD MOUNTED BELOW THE PLUG-IN UNIT CHASSIS.
3. CAPACITORS C65, C66 AND C67 HAVE A NEGATIVE TEMPERATURE COEFFICIENT.
4. PLACE JUMPER BETWEEN TERMINALS 10 AND 11 OF TB251 WHEN IT IS DESIRABLE TO USE THE SQUELCH RELAY UNIT.
5. GRD 1, GRD 2, GRD 3, AND GRD 4 SPECIFIC GRD IN RECEIVER BASE.
6. JUMPER CONNECTION BETWEEN TERMINALS 7 AND 8 OF TB251 USED FOR OPERATION WITH POWER SUPPLY PP-846/U.
7. ON ALL EQUIPMENTS EXCEPT THOSE WITH AUDIO B SQUELCH PLUG-IN UNITS ON ORDER NO 11661-PHILA-52 WITH SERIAL NUMBERS BELOW 1214, THE FOLLOWING DIFFERENCES EXIST:
   (a) R150 AND THE LEADS CONNECTING IT FROM THE 150-VOLT LINE TO PIN 2 OF V125 ARE DELETED.
   (b) PIN 2 OF V124 IS CONNECTED TO PIN 2 OF V125.
   (c) THE VALUE OF C129 IS 47UUF
   (d) THE VALUE OF R131 IS 470K.
   (e) THE VALUE OF R132 IS 68K.
   (f) THE VALUE OF R135 IS 330K.
   (g) THE VALUE OF R137 IS 560K.
   (h) THE VALUE OF R142 IS 330K.
   (i) THE VALUE OF R147 IS 120K.
   (j) THE VALUE OF R149 IS 220K.
8. FILTER FL81 IS REPLACED BY C111 (150UUF), R115 (47K), AND C112 (100 UUF) (READING FROM LEFT TO RIGHT) IN ALL 2ND IF DISCR PLUG-IN UNITS EXCEPT THOSE ON ORDER NO 11661-PHILA-52 WITH SERIAL NUMBERS BELOW 5551.

Figure 78. Radio Receiver R-394/U, schematic diagram.

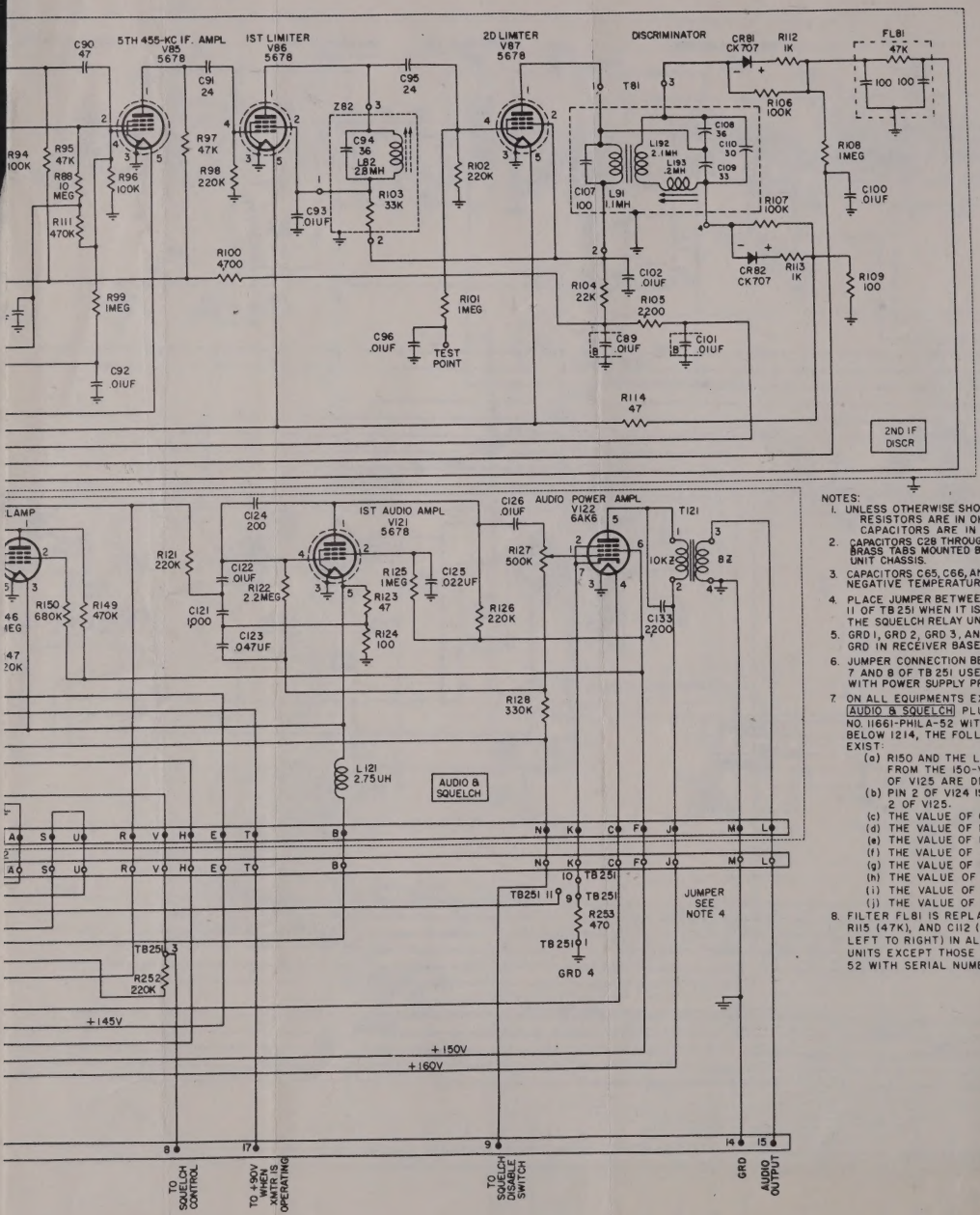

NOTES:

1. UNLESS OTHERWISE SHOWN, RESISTORS ARE IN OHMS, CAPACITORS ARE IN UUF
2. CAPACITORS C28 THROUGH C31 ARE SMALL BRASS TABS MOUNTED BELOW THE PLUG-IN UNIT CHASSIS.
3. CAPACITORS C65, C66, AND C67 HAVE A NEGATIVE TEMPERATURE COEFFICIENT.
4. PLACE JUMPER BETWEEN TERMINALS 10 AND 11 OF TB 251 WHEN IT IS DESIRABLE TO USE THE SQUELCH RELAY UNIT.
5. GRD 1, GRD 2, GRD 3, AND GRD 4 SPECIFIC GRD IN RECEIVER BASE.
6. JUMPER CONNECTION BETWEEN TERMINALS 7 AND 8 OF TB 251 USED FOR OPERATION WITH POWER SUPPLY PP-846/U.
7. ON ALL EQUIPMENTS EXCEPT THOSE WITH AUDIO & SQUELCH PLUG-IN UNITS ON ORDI NO. 11661-PHILA-52 WITH SERIAL NUMBER BELOW 1214, THE FOLLOWING DIFFERENCE EXIST:
   (a) R150 AND THE LEADS CONNECTIN FROM THE 150-VOLT LINE TO PI OF V125 ARE DELETED.
   (b) PIN 2 OF V124 IS CONNECTED TO 2 OF V125.
   (c) THE VALUE OF C129 IS 47 UUF
   (d) THE VALUE OF R131 IS 470K.
   (e) THE VALUE OF R132 IS 68K.
   (f) THE VALUE OF R136 IS 330K.
   (g) THE VALUE OF R137 IS 560K.
   (h) THE VALUE OF R142 IS 330K
   (i) THE VALUE OF R147 IS 120K
   (j) THE VALUE OF R149 IS 22C
8. FILTER FL81 IS REPLACED BY C11 R115 (47K), AND C112 (100 UUF) (R LEFT TO RIGHT) IN ALL 2ND IF DI UNITS EXCEPT THOSE ON ORDER 52 WITH SERIAL NUMBERS BELO

T.O. 31R2-2TRC28-1
(ARMY) TM 11-839
Basic & Changes No. 2, 3, 4, 5 & 7

RADIO TRANSMITTERS

T-278/U AND T-416/GR

Change #7, 5 September 1961 supersedes Change 6, 5 August 1960, Technical Order 31R2-2GR-444 (TM 11-5820-265-10P) 24 April 1959 and partially replaces 31R2-2U-234 (TM 11-5820-363-20P) 28 January 1960 including Change 1 and 31R2-2GR-454 (TM 11-5820-265-20P) 27 April 1959.

PUBLISHED UNDER THE AUTHORITY

OF THE SECRETARIES OF THE ARMY AND THE AIR FORCE

AIR FORCE, Cato Show Prtg. Co. 6/18/62 - 600 - REPRINT

Reproduction for non-military use of the information or illustrations contained in this publication is not permitted without specific approval of the issuing service (BuAer or AMC). The policy for use of Classified Publications is established for the Air Force in AFR 205-1 and for the Navy in Navy Regulations, Article 1509.

LIST OF REVISED PAGES ISSUED

INSERT LATEST REVISED PAGES. DESTROY SUPERSEDED PAGES.

NOTE: The portion of the text affected by the current revision is indicated by a vertical line in the outer margins of the page.

* The asterisk indicates pages revised, added or deleted by the current revision.

ADDITIONAL COPIES OF THIS PUBLICATION MAY BE OBTAINED AS FOLLOWS:

USAF

USAF ACTIVITIES.—In accordance with Technical Order No. 00-5-2.
NAVY ACTIVITIES.—Submit request to nearest supply point listed below, using form NavAer-140: NAS, Alameda, Calif.; ASD, Orote, Guam; NAS, Jacksonville, Fla.; NAS, Norfolk, Va.; NASD, Oahu; NASD, Philadelphia, Pa.; NAS, San Diego, Calif.; NAS, Seattle, Wash.
For listing of available material and details of distribution see Naval Aeronautics Publications Index NavAer 00-500.

DEPARTMENT OF THE ARMY TECHNICAL MANUAL

DEPARTMENT OF THE AIR FORCE TECHNICAL ORDER

RADIO TRANSMITTERS T–278/U and T–416/GR

TM 11–839
TO 31R2–2TRC28–1
CHANGES No. 7

DEPARTMENTS OF THE ARMY
AND THE AIR FORCE
WASHINGTON 25, D.C., *5 September 1961*

TM 11–839/TO 31R2–2TRC28–1, 14 February 1955, is changed as follows:

Page 3, paragraph 2 (page 1 of C3). Delete subparagraph *e* and substitute the following:

e. Any comments concerning omissions and discrepancies in appendix I and appendix II will be prepared on DA Form 2028 and forwarded direct to Commanding Officer, U.S. Army Signal Materiel Support Agency, ATTN: SIGMS–ML, Fort Monmouth, N.J.

f. Forward all other comments on this publication direct to Commanding Officer, U.S. Army Signal Materiel Support Agency, ATTN: SIGMS–PA2d, Fort Monmouth, N.J.

APPENDIX I (Added)

MAINTENANCE ALLOCATION

Section I. MAINTENANCE ALLOCATION

1. General

a. The maintenance allocation chart assigns maintenance functions and repair operations to be performed by the lowest appropriate maintenance echelon.

b. Columns in the maintenance allocation chart are as follows:

(1) *Part or component.* This column shows only the nomenclature or standard item name. Additional descriptive data is included only where clarification is necessary to identify the part. Components and parts comprising a major end item are listed alphabetically. Assemblies and subassemblies are in alphabetical sequence with their components listed alphabetically immediately below the assembly listing.

(2) *Maintenance function.* This column indicates the various maintenance functions allocated to the echelon capable of performing the operations.

(*a*) *Service.* To clean, to preserve, and to replenish fuel and lubricants.

(*b*) *Adjust.* To regulate periodically to prevent malfunction.

(*c*) *Inspect.* To verify serviceability and to detect incipient electrical or mechanical failure by scrutiny.

(*d*) *Test.* To verify serviceability and to detect incipient electrical or mechanical failure by use of special equipment such as gages, meters, etc.

(*e*) *Replace.* To substitute service assemblies, subassemblies, and parts for unserviceable components.

***These changes supersede C 6, 5 August 1960 and TM 11–5820–265–10P, 24 April 1959; and so much of TM 11–5820–363–20P, 28 January 1960, including C 1, 17 October 1960, and TM 11–5820–265–20P, 27 April 1959 as pertains to the maintenance allocation chart.**

(*f*) *Repair.* To restore an item to serviceable condition through correction of a specific failure or unserviceable condition. This function includes but is not limited to, inspecting, cleaning, preserving, adjusting, replacing, welding, riveting, and straightening.

(*g*) *Aline.* To adjust two or more components of an electrical system so that their functions are properly synchronized.

(*h*) *Calibrate.* To determine, check, or rectify the graduation of an instrument, weapon, or weapons system, or components of a weapons system.

(*i*) *Rebuild.* To restore an item to a standard as near as possible to original or new condition in appearance, performance, and life expectancy. This is accomplished through the maintenance technique of complete disassembly of the item, inspection of all parts or components, repair or replacement of worn or unserviceable elements using original manufacturing tolerances and/or specifications, and subsequent reassembly of the item.

(*j*) *Overhaul.* To restore an item to completely serviceable condition as prescribed by serviceability standards developed and published by heads of technical services. This is accomplished through employment of the technique of "inspect and repair only as necessary" (IROAN). Maximum utilization of diagnostic and test equipment is combined with minimum disassembly of the item during the overhaul process.

(3) *1st, 2d, 3d, 4th, 5th echelon.* The symbol X indicates the echelon responsible for performing that particular maintenance operation, but does not necessarily indicate that repair parts will be stocked at that level. Echelons higher than the echelon marked X are authorized to perform the indicated operation.

(4) *Tools required.* This column indicates codes assigned to each individual tool equipment, test equipment, and maintenance equipment referenced. The grouping of codes in this column of the maintenance allocation chart indicates the tool, test, and maintenance equipment required to perform the maintenance function.

(5) *Remarks.* Entries in this column are used to clarify any of the data cited in the preceding columns.

c. Columns in the allocation of tools for maintenance functions chart are as follows:

(1) *Tools required for maintenance functions.* This column lists tools, test, and maintenance equipment required to perform the maintenance functions.

(2) *1st, 2d, 3d, 4th, 5th echelon.* The dagger (†) symbol indicates the echelons allocated the facility.

(3) *Tool code.* This column lists the tool code assigned.

2. Mounting Hardware

The basic entries of the maintenance allocation chart do not include mounting hardware such as screws, nuts, bolts, washers, brackets, clamps, etc.

3. Maintenance by Using Organizations

When this equipment is used by signal services organizations organic to theater headquarters or communication zones to provide theater communications, those maintenance functions allocated up to and including fourth echelon are authorized to the organization operating this equipment.

Section II. MAINTENANCE ALLOCATION CHART, T–278/U

(1) PART OR COMPONENT	(2) MAINTENANCE FUNCTION	(3) 1ST ECH	(4) 2ND ECH	(5) 3RD ECH	(6) 4TH ECH	(7) 5TH ECH	(8) TOOLS REQUIRED	(9) REMARKS
TRANSMITTER RADIO T-278/U								
	service		X					
	inspect			X			14	Internal
			X					External
	test			X			3, 6, 7, 8, 9, 12, 15	
						X	1, 2, 4, 5, 6, 7, 9, 10, 11, 15	
	replace		X				13	
	repair			X			14	
	rebuild					X	14	Plus shop support
ADAPTER, CRYSTAL SOCKET	replace		X					
BAR SHORTING	repair			X				
BUSHING	replace			X				
CAPACITOR	replace			X				
CLAMP, ELECTRICAL	replace		X					
CLIP, ELECTRICAL	replace		X					
COIL, RADIO FREQUENCY	replace			X				
CONNECTOR	replace			X				
CONTACT ELECTRICAL	replace			X				
COVER, RADIO TRANSMITTER	replace		X					
DECAL	replace			X				
ELECTRON TUBE	replace		X					
FASTENER STUD AND PIN	replace			X				
HEATING ELEMENT, ELECTRICAL:	replace		X					
INSULATION SHEET, ELECTRON	replace			X				
INSULATOR, BUSHING	replace			X				
INSULATOR, PLATE	replace			X				
INSULATOR, SPACER	replace			X				
INSULATOR, STANDOFF	replace			X				

(1) PART OR COMPONENT	(2) MAINTENANCE FUNCTION	(3) 1ST ECH.	(4) 2ND ECH.	(5) 3RD ECH.	(6) 4TH ECH.	(7) 5TH ECH.	(8) TOOLS REQUIRED	(9) REMARKS
T-278/U (continued)								
INSULATOR, WASHER	replace			X				
LINE SECTION, RADIO FREQUENCY TRANSMISSION	replace				X			
PIN, GROOVED	replace			X				
PIN, DRIVE	replace			X				
PIN, WRIST	replace				X			
PLATE, CAPACITOR	replace			X				
PLATE, DETENT	replace			X				
PLATE MOUNTING CAPACITOR	replace			X				
PLUNGER	replace			X				
RELAY, SOLENOID	replace			X				
RESISTOR	replace			X				
RETAINER, ELECTRON TUBE	replace		X					
RETAINER, FASTENER STUD	replace				X			
RETAINER, SOCKET, ELECTRON TUBE	replace		X					
RING, RETAINER	replace			X				
SCREW, EXTERNALLY RELIEVED BODY	replace		X					
SHAFT	replace			X				
SHAFT COUPLING	replace				X			
SHELL, ELECTRICAL CONNECTOR	replace			X				
SHIELD, ELECTRON TUBE	replace		X					
SOCKET, ELECTRON TUBE	replace			X				
SPRING	replace			X				
STRAP, MOUNTING	replace			X				
SWITCH, TOGGLE	replace			X				
TERMINAL BOARD	replace				X			
TERMINAL STUD	replace			X				
TRANSFORMER, AUDIO FREQUENCY	replace			X				
TRANSFORMER, RADIO FREQUENCY	replace			X				
WASHER FLAT	replace			X				

Section III. ALLOCATION OF TOOLS FOR MAINTENANCE FUNCTIONS, T–278/U

(1) TOOLS REQUIRED FOR MAINTENANCE FUNCTIONS	(2) 1ST ECH.	(3) 2ND ECH.	(4) 3RD ECH.	(5) 4TH ECH.	(6) 5TH ECH.	(7) TOOL CODE	(8) REMARKS
T-278/U (continued)							
ANALYZER, SPECTRUM TS-723/U				†	†	1	
AUDIO OSCILLATOR TS-382/U			†	†	†	2	
FREQUENCY METER AN/URM-32			†			3	
FREQUENCY METER AN/URM-81					†	4	
METER, MODULATION ME-57/U				†	†	5	In development interim use IP-173/U and TS-497/URR.
MULTIMETER AN/URM-105		†	†	†	†	6	
ELECTRONIC MULTIMETER TS-505/U			†	†	†	7	
POWER SUPPLY PP-1243/U			†	†		8	Power supply for AN/URM-32
RF WATTMETER AN/URM-43			†	†	†	9	
GENERATOR, SIGNAL AN/URM-70			†	†	†	10	
TEST SET, ELECTRON TUBE TV-2/U					†	11	
TEST SET, ELECTRON TUBE TV-7/U			†	†		12	
TOOL EQUIPMENT TE-41		†				13	
TOOL EQUIPMENT TE-113			†	†	†	14	
VOLTMETER, METER ME-30A/U			†	†	†	15	

Section IV. MAINTENANCE ALLOCATION CHART, T-416/GR

(1) PART OR COMPONENT	(2) MAINTENANCE FUNCTION	(3) 1ST ECH.	(4) 2ND ECH.	(5) 3RD ECH.	(6) 4TH ECH.	(7) 5TH ECH.	(8) TOOLS REQUIRED	(9) REMARKS
TRANSMITTER RADIO T-416/GR	service		X					
	inspect		X				13	
	test		X				6, 12, 13	
				X			3, 6, 7, 8, 9, 12, 14, 15	
						X	1, 2, 4, 5, 6, 7, 9, 10, 11, 14, 15	
	replace		X				13	
	repair		X				13	
				X			14	
	rebuild					X	14	Plus shop support
BUSHING	replace			X			14	
CAPACITOR	replace			X			14	
CAPACITOR, FIXED, ELECTROLYTIC	replace		X				14	C425
CLAMP, ELECTRICAL	replace			X			14	
CLIP, ELECTRICAL	replace			X			14	
COIL, RADIO FREQUENCY	replace			X			14	
CONNECTOR	replace			X			14	
CONTACT, ELECTRICAL	replace			X			14	
COVER	replace		X				14	
CRYSTAL UNIT	replace			X				
DECAL	replace			X				
ELECTRON TUBE:	replace		X					
FASTENER, STUD AND PIN	replace			X			14	
HANDLE	replace			X			14	
INSULATOR, STAND-OFF	replace			X			14	
LINE SECTION, RADIO FREQUENCY TRANSMISSION	replace				X		14	
OVEN CRYSTAL	replace		X					
PIN, DRIVE	replace			X			14	
PIN WRIST	replace				X		14	

(1) PART OR COMPONENT	(2) MAINTENANCE FUNCTION	(3) 1ST ECH	(4) 2ND ECH	(5) 3RD ECH	(6) 4TH ECH.	(7) 5TH ECH.	(8) TOOLS REQUIRED	(9) REMARKS
T-416/GR (continued)								
PLATE CAPACITOR	replace			X			14	
PLATEDETENT	replace			X			14	
PLUNGER	replace			X			14	
RELAY, SOLENOID ASSEMBLY	replace			X			14	
RESISTOR	replace			X			14	
RETAINER, ELECTRON TUBE:	replace			X			14	
RETAINER, FASTENER STUD	replace				X		14	
RING, RETAINER	replace			X			14	
SCREW, EXTERNALLY RELIEVED BODY	replace		X				14	
SHAFT	replace			X			14	
SHAFT, COUPLING	replace				X		14	
SHELL, ELECTRICAL CONNECTOR	replace			X			14	
SOCKET, ELECTRON TUBE	replace			X			14	
SPRING	replace			X			14	
SPRING HELICAL COMPRESSION	replace			X			14	
STRAP, MOUNTING	replace			X			14	
SWITCH, TOGGLE	replace			X			14	
TERMINAL BOARD	replace			X			14	
TERMINAL STUD	replace			X			14	
TRANSFORMER	replace			X			14	
WASHER	replace			X			14	

Section V. ALLOCATION OF TOOLS FOR MAINTENANCE FUNCTIONS, T-416/GR

(1) TOOLS REQUIRED FOR MAINTENANCE FUNCTIONS	(2) 1ST ECH	(3) 2ND ECH	(4) 3RD ECH	(5) 4TH ECH	(6) 5TH ECH	(7) TOOL CODE	(8) REMARKS
T-416/GR (continued)							
ANALYZER, SPECTRUM TS-723/U				†	†	1	
AUDIO OSCILLATOR TS-382/U				†	†	2	
FREQUENCY METER AN/URM-32			†			3	
FREQUENCY METER AN/URM-81				†	†	4	
*METER, MODULATION ME-57/U				†	†	5	In development (Interim item IP-173/U and TS-497)
MULTIMETER AN/URM-105		†	†	†	†	6	
MULTIMETER, ELECTRONIC TS-505/U			†	†	†	7	
POWER SUPPLY PP-1243/U			†			8	
RF WATTMETER AN/URM-43			†	†	†	9	
SIGNAL GENERATOR AN/URM-70				†	†	10	
TEST SET, ELECTRON TUBE TV-2/U					†	11	
TEST SET, ELECTRON TUBE TV-7/U		†	†	†		12	
TOOL EQUIPMENT TE-41		†				13	
TOOL EQUIPMENT TE-113			†	†	†	14	
VOLTMETER, METER ME-30/U			†	†	†	15	

APPENDIX II (Added)
BASIC ISSUE ITEMS

Section I. INTRODUCTION

1. Scope

a. This appendix lists items supplied for initial operation. The list includes tools, parts, and material issued as part of the major end item. The list includes all items authorized for basic operator maintenance of the equipment. End items of equipment are issued on the basis of allowances prescribed in equipment authorization tables and other documents that are a basis for requisitioning.

b. Columns are as follows:

(1) *Source, maintenance and recoverability code.* Not used.

(2) *Federal stock number.* This column lists the 11-digit Federal stock number.

(3) *Designation by model.* Not used.

(4) *Description.* Nomenclature or the standard item name and brief identifying data for each item are listed in this column. When requisitioning, enter the nomenclature and description.

(5) *Unit of issue.* The unit of issue is the supply term by which the individual item is counted for procurement, storage, requisitioning, allowances, and issue purposes.

(6) *Expendability.* Expendable items are indicated by the letter X; nonexpendable items are indicated by NX.

(7) *Quantity authorized.* Under "items comprising an operable equipment," the column lists the quantity of items supplied for the initial operation of the equipment.

(8) *Illustration.* Not used.

2. Crystals

The crystal unit will be requisitioned in the quantities and frequencies as authorized by the Army commander or theater of operations commander.

Section II. FUNCTIONAL PARTS LIST, T-278/U

(1) SOURCE MAINTENANCE AND RECOVERABILITY CODE	(2) FEDERAL STOCK NUMBER	(3) DESIGNATION BY MODEL	(4) DESCRIPTION	(5) UNIT OF ISSUE	(6) EXPENDABILITY	(7) QUANTITY AUTHORIZED	(8) ILLUSTRATIONS FIGURE NO	(9) ILLUSTRATIONS ITEM NO
			ITEMS COMPRISING AN OPERABLE EQUIPMENT					
			TRANSMITTER RADIO T-278/U					
	5820-503-3415		TRANSMITTER RADIO T-278/U:	ea	NX			
	Ord thru AGC		TECHNICAL MANUAL TM 11-839:	ea	X	2		
				ea	X	2		
	5120-198-5401		WRENCH: for No. 4 Allen setscrew; Allen Cat No. 4					
	5120-198-5398		WRENCH: for No. 6 Allen setscrew; Allen Cat No. 6	ea	X	1		
			RUNNING SPARES AND ACCESSORY ITEMS					
			NO PARTS AUTHORIZED FOR STOCKAGE AT FIRST ECHELON					

Section III. FUNCTIONAL PARTS LIST, T-416/GR

(1) SOURCE MAINTENANCE AND RECOVERABILITY CODE	(2) FEDERAL STOCK NUMBER	(3) DESIGNATION BY MODEL	(4) DESCRIPTION	(5) UNIT OF ISSUE	(6) EXPENDABILITY	(7) QUANTITY AUTHORIZED	(8) ILLUSTRATIONS FIGURE NO	(9) ILLUSTRATIONS ITEM NO
			ITEMS COMPRISING AN OPERABLE EQUIPMENT					
			TRANSMITTER RADIO T-416/GR					
	5820-503-3304		TRANSMITTER RADIO T-416/GR: F3 type of emission, 152 to 174 mc freq range; 1 band, xtal cont rolled; 50w; AC 6.3 v ac 60 cyc, single ph, 12.6 w, 14-1/2 in lg x 4-1/2 in wd x 8-9/16 in h; mtd in std case; mp and fp; MIL Spec N-11539	ea	NX			
			NOTE: The Crystal Unit for Radio Transmitter T-416/GR will be requisitioned in the quantities and frequencies as authorized by the Army Commander or Theatre of Operations commander					
			CRYSTAL UNIT CR-27/U					
	5120-198-5401		WRENCH: Allen cat No. 4	ea	X	1		
	5120-198-5398		WRENCH: Allen Cat No. 6	ea	X	1		
			RUNNING SPARES AND ACCESSORY ITEMS					
			NO PARTS AUTHORIZED FOR STOCKAGE AT FIRST ECHELON.					

DEPARTMENT OF THE ARMY TECHNICAL MANUAL
DEPARTMENT OF THE AIR FORCE TECHNICAL ORDER

TM 11-839
TO 31R2-2TRC28-1
C 5

RADIO TRANSMITTERS T-278/U AND T-416/GR

TM 11-839
TO 31R2-2TRC28-1
CHANGES No. 5

DEPARTMENTS OF THE ARMY
AND THE AIR FORCE
WASHINGTON 25, D.C., *10 December 1959*

TM 11-839/TO 31R2-2TRC28-1, 14 February 1955, is changed as follows:

Page 58. Add new section III.1 as follows:

Section III.1. FOURTH ECHELON TESTING PROCEDURES

70.1. General

a. Testing procedures are prepared for use by Signal Field Maintenance Shops and Signal Service Organizations responsible for fourth echelon maintenance of signal equipment to determine the acceptability of repaired signal equipment. These procedures set forth specific requirements which repaired signal equipment must meet before it is returned to the using organization. The testing procedures may also be used as a guide for testing equipment repaired at third echelon if the proper tools and test equipments are available. A summary of the performance standards is given in paragraph 70.9.

b. Each test depends on the preceding one for certain operating procedures and, where applicable, for test equipment calibration. Comply with the instructions preceding the chart before proceeding to the chart. Perform each test in sequence. Do not vary the sequence. For each step, perform all the actions required in the Test equipment control settings and Equipment under test control settings columns: then perform each specific test procedure and verify it against its performance standard.

70.2. Test Equipment and Materials

All test equipment, materials, and other equipment required to perform the testing procedures given in this section are listed in the following chart and authorized under TA 11-17, Signal Field Maintenance Shops, and TA 11-100(11-17), Allowances of Signal Corps Expendable Supplies for Signal Field Maintenance Shop, Continental United States.

a. Test Equipment.

Nomenclature	Federal stock No.	Technical manual
Indicator, Panoramic IP-173(*)/U.[a]	5820-224-5500	TM 11-5086.
Receiver, Radio R-220/URR.	5820-642-8144	TM 11-882.
RF Wattmeter AN/URM-43A.	6625-635-9186	TM 11-5133.
Generator, Signal AN/URM-70.	6625-519-2352	TM 11-1258.
Multimeter TS-352(*)/U[b]	6625-242-5023	TM 11-5527.
Audio Oscillator TS-382(*)/U.[c]	6625-192-5094	TM 11-2684A.
Maintenance Equipment ME-30(*)/U.[d]	6625-669-0742	TM 11-5132.
Light Assembly, Electric MX-1292/PAQ.	6695-537-4470	TM 11-5540.

[a] Indicates IP-173/U, IP-173A/U, and IP-173B/U.
[b] Indicates TS-352/U, TS-352A/U, and TS-352B/U.
[c] Indicates TS-382A/U, TS-382B/U, TS-382D/U, TS-382E/U, and TS-382F/U.
[d] Indicates ME-30A/U and ME-30B/U.

b. Materials and Other Equipment.

Nomenclature	Federal stock No.	Technical manual
Adapter UG–201A/U (p/o AN/URM–25F).	5935–201–3096	TM 11–5551E.
Cord CG–409A/U (p/o AN/URM–25F).	6625–503–3029	TM 11–2684A.
Radio Set AN/VRC–19(*).*	5820–503–1124	TM 11–297.
Handset H–33/PT p/o AN/VRC–19(*).	5965–163–9947	TM 11–297.
Power Supply PP–1097A/G or	6130–669–6640	TM 11–5111.
Power Supply 1104A/G or	6130–542–6385	TM 11–5126.
Battery BB–46	6140–126–1544	None.
Loudspeaker LS–166 or	5965–243–6420	TM 11–284.
Loudspeaker LS–3 or	5965–163–1791	TM 11–4871.
Loudspeaker LS–7	5965–126–8401	TM 11–4871.

* Indicates AN/VRC–19, AN/VRC–19X, and AN/VRC–19Y.

70.3. Special Requirements

a. Labeling of certain controls on Audio Oscillator TS–382A/U differs from those on other models of this equipment. Reference to controls in the chart and on figures apply to Audio Oscillator TS–382D/U. Corresponding controls and control settings for the Audio Oscillator TS–382A/U are included in parentheses immediately below or adjacent to those given for Audio Oscillator TS–382D/U.

b. Power Supply PP–1097A/G may be used for testing if it is properly strapped to obtain the desired output voltage. Power Supply PP–1104A/G may also be used as a primary power source. Battery BB–46 may also be used if multiple units are properly connected together to obtain the desired output voltage. Any other equivalent dc power source may be used if it is capable of delivering the power specified below.

Radio set used for testing purposes	Dc voltage requirement	Dc current requirement
AN/VRC–19	24V	12.5 amp.
AN/VRC–19X	12V	25 amp.
AN/VRC–19Y	6V	50 amp.

When connecting the radio set to the power source, connect the white lead of the radio set to the plus terminal of the power source and connect the black lead of the radio set to the negative terminal of the power source.

70.4. Modification Work Orders

The performance standards listed in the tests (par. 70.5 through 70.8) assume that the modification work orders listed below have been performed. A listing of current modification work orders will be found in DA Pam 310–4.

MWO No.	Date	Priority	Echelon	Location of MWO marking	Remarks
11–5800–201–35/1	Oct 58	Normal	3, 4, 5	Front panel near nameplate	All sets.
11–5820–271–35/2	Apr 59	Normal	3, 4, 5	Front panel near nameplate	All sets.

70.5. Physical Tests and Inspection

a. Test Equipment and Materials.

Light Assembly, Electric MX–1292/PAQ

b. Test Connections and Conditions. Remove the dust covers from the sides of the transmitter to allow inspection of the interior. Electrical connections to the equipment are not necessary for this test.

c. Test Procedures.

Step No.	Control settings test equipment	Control settings equipment under test	Test procedure	Performance standard
1	N/A	Controls may be in any position.	Inspect all controls and mechanical assemblies for evidence of physical damage, loose or missing parts, and excessively worn dust covers, handles, screws, and fasteners.	Equipment should be complete and undamaged. All screws should be properly tightened. Dust covers, handles, screws, and fasteners should be in good condition.
			Inspect all metal surfaces for condition of finish.	All metal surfaces intended to be painted should not show bare metal.
			Note. Touchup painting is recommended in lieu of refinishing whenever practicable.	
			Check all front panel switches and controls for proper operation.	All switches and controls should operate smoothly without evidence of binding and they should be fastened securely in place.
			Inspect the variable capacitors for dust, dirt, and other foreign matter.	The variable capacitors should be clean.
			Check the equipment for applicable MWO's and note any MWO's not performed.	Refer to paragraph 70.4.
2	MX–1292/PAQ 245V. FOR M. V. LAMP switch: ON.	Controls may be in any position.	Expose the chassis to the direct rays of the mercury-vapor lamp and inspect components, wiring, and chassis surfaces for evidence of moistureproofing and fungiproofing (MFP) varnish. Inspect connector contacts and variable capacitor plates for absence of MFP varnish.	All components, wiring, and chassis surfaces should be completely covered with MFP varnish. There should be no evidence of MFP varnish on connector contacts and variable capacitor plates.
			Note. MFP varnish glows gray-green when exposed to the rays of the lamp.	*Note.* Do not apply MFP varnish on equipments or parts which were not originally finished with MFP varnish.
			Turn off the lamp	None.

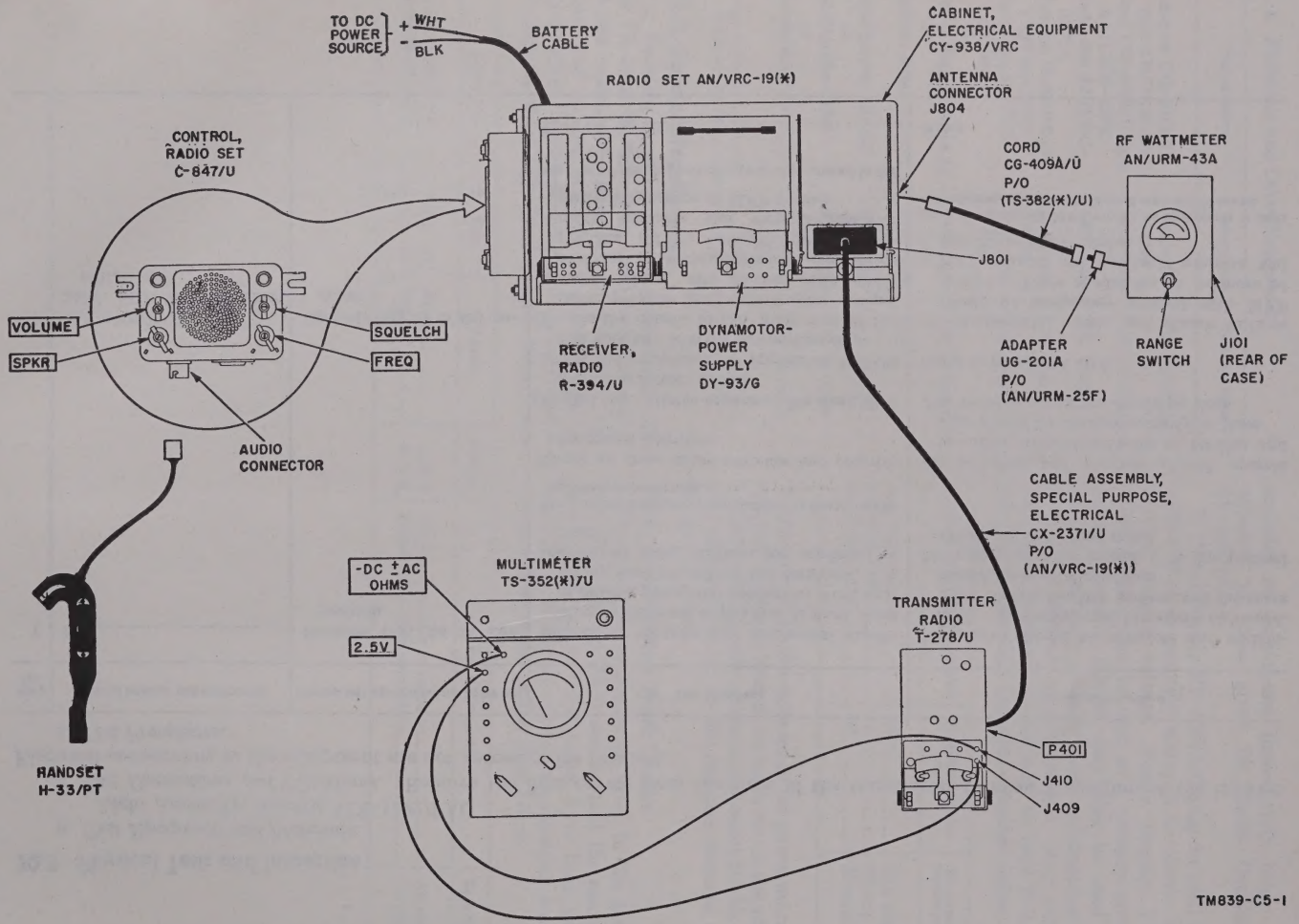

Figure 44.1. Radio Transmitters T–278/U and T–416/GR, power output and parasitic oscillation tests.

70.6. Power Output and Parasitic Oscillation Tests

(fig. 44.1)

a. Test Equipment and Materials.

RF Wattmeter AN/URM–43
Radio Set AN/VRC–19(*).
Multimeter TS–352(*)/U.
Handset H–33/PT.
Adapter UG–201A/U.
Cord CG–409A/U.

b. Test Connections and Conditions. Connect the equipment as shown in figure 44.1. The dust covers must be removed from the transmitter for this test.

c. Test Procedures.

Step No.	Control settings test equipment	Control settings equipment under test	Test procedure	Performance standard
1	TS–352(*)/U FUNCTION: DC current. Range switch: 500 MA.	Controls may be in any position.	Turn the primary power supply (PP–1097A/G or equivalent) on and adjust the output voltage to 27.5-volt indication on the OUTPUT meter. Allow the equipment a 2-minute warmup period.	None.
	C–847/U (p/o AN/VRC–19) VOLUME-OFF: midposition. SQUELCH: max. clockwise.		Depress the push-to-talk switch on the H–33/PT. Note and record the meter indication on the TS–352(*)/U.	Meter should indicate 1.5±.05 volts. This indicates a plate current of 150±5 ma.
	AN/URM–43A Range switch: 60 w.		Note and record the meter indication on the AN/URM–43A.	20 watts minimum.
2	Same as step No. 1	Controls may be in any position.	With the push-to-talk switch depressed and with power applied, remove the crystal from the transmitter under test. Note and record the meter indications on the TS–352(*)/U and AN/URM–43A.	Both meters should indicate zero.
			Release the push-to-talk switch and replace the crystal.	None.

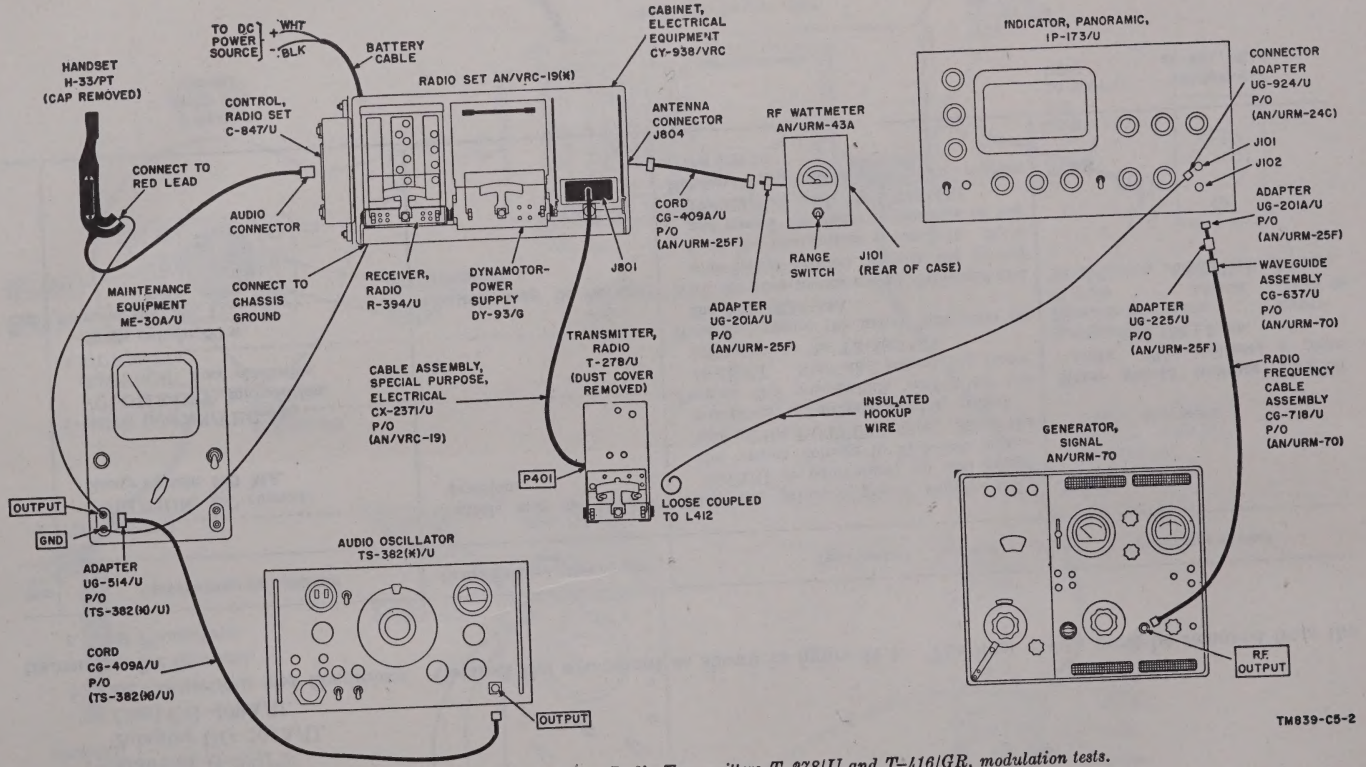

Figure 44.2. Radio Transmitters T-278/U and T-416/GR, modulation tests.

. Turn on the test equipment and allow 5 minutes

ocedure	Performance standard
, adjust the BRIL- JS controls for a clear, se line on the scope. ZONTAL POSITION ace is centered on the reen.	None.
alk switch on the H- he CENTER FREQ *)/U until the pip on be screen is centered ie.	None.
T push-to-talk switch he IP-173(*)/U GAIN ight of approximately e push-to-talk switch.	None.
-70 MODULATION d adjust the DEVI- an 18 KC indication CLES DEVIATION	None.
T push-to-talk switch IP-173(*)/U SWEEP TER FREQ controls on pattern extends 4 side of the vertical 0 push-to-talk switch.	None.
-70 MODULATION DD.	None.
)/U OUTPUT CON- or 1.25-volt indication U meter.	None.
T push-to-talk switch. n on the IP-173(*)/U	*h*. The pattern should cover not more than 4 scale divisions, on each side of the 0 line.
range selector switch hile holding the H-33/ vitch depressed, adjust OUTPUT CONTROL e ME-30(*)/U meter S. Observe the pat- 3(*)/U scope.	Pattern should not increase in width from that noted in *h* above.
talk switch.	None.

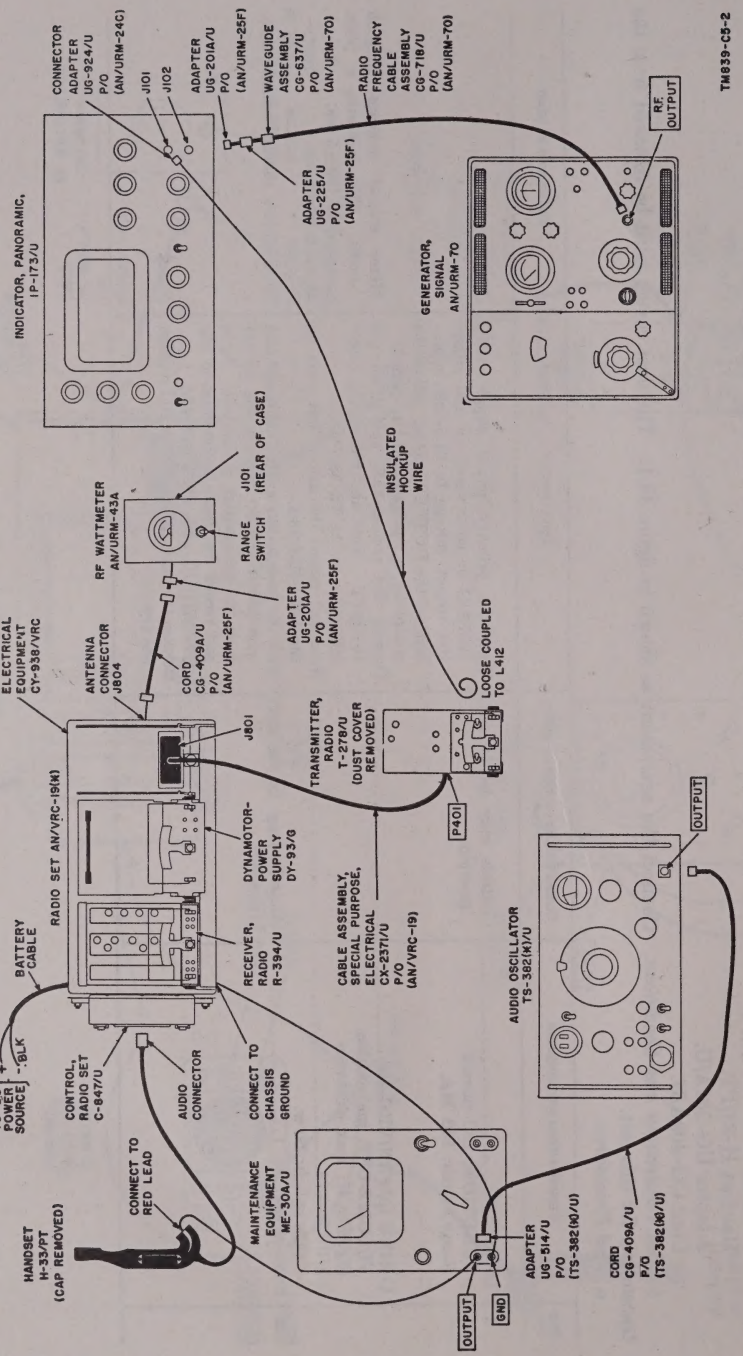

Figure 44.2. Radio Transmitters T-278/U and T-416/GR, modulation tests.

70.7. Modulation Tests

(fig. 44.2)

a. Test Equipment and Materials.

Indicator, Panoramic IP–173(*)/U.
Generator, Signal AN/URM–70.
Radio Set AN/VRC–19(*).
Audio Oscillator TS–382(*)/U.
RF Wattmeter AN/URM–43A.
Maintenance Equipment ME–30(*)/U.
Handset H–33/PT.

b. Test Connections and Conditions. Connect the equipment as shown in figure 44.2. Turn on the test equipment and allow 5 minutes warmup time.

c. Test Procedures.

Step No.	Control settings test equipment	Control settings equipment under test	Test procedure	Performance standard
1	IP–173(*)/U CENTER FREQ: midpoint. RESOLUTION: 1. INTENSIFIER: max. ccw.	TUNE-OPR: TUNE TEST-OFF: OFF.	On the IP–173(*)/U, adjust the BRILLIANCE and FOCUS controls for a clear, sharply defined base line on the scope. Adjust the HORIZONTAL POSITION control until the trace is centered on the cathode-ray tube screen.	None.
	SCALE SELECTOR: LIN SWEEP RATE SELECTOR: 30. HORIZONTAL POSITION: midpoint. SWEEP WIDTH: 1. GAIN: 5.		Depress the push-to-talk switch on the H–33/PT. Adjust the CENTER FREQ control on IP–173(*)/U until the pip on the cathode-ray tube screen is centered on the vertical 0 line.	None.
	TS–382D/U FREQUENCY MULTIPLIER RANGE (RANGE): X 10. Main tuning dial: 100.		Holding the H–33/PT push-to-talk switch depressed, adjust the IP–173(*)/U GAIN control for a pip height of approximately 1 inch. Release the push-to-talk switch.	None.
	OUTPUT MULTIPLIER ATTENUATOR (ATTENUATOR): X 10. OUTPUT CONTROL (OUTPUT LEVEL): max.		Set the AN/URM–70 MODULATION switch to 1000 and adjust the DEVIATION control for an 18 KC indication on the KILOCYCLES DEVIATION meter.	None.
	AN/URM–70 FREQ RANGE-MC: 100–200. TUNING: exactly 5 MC above transmitter frequency. MODULATION: OFF. DEV MULT: X 1. OUTPUT: 3K.		Depress the H–33/PT push-to-talk switch and adjust the IP–173(*)/U SWEEP WIDTH and CENTER FREQ controls until the modulation pattern extends 4 divisions on each side of the vertical 0 line. Release the push-to-talk switch.	None.
	ME–30(*)/U Range selector switch: 3 VOLTS.		Set the AN/URM–70 MODULATION switch to EXT MOD.	None.
	C–847/U (p/o AN/VRC–19) VOLUME-OFF: midpoint. SQUELCH: max. cw.		Turn the TS–382(*)/U OUTPUT CONTROL clockwise for 1.25-volt indication on the ME–30(*)/U meter.	None.
	AN/URM–43A Range switch: 60 W.		Depress the H–33/PT push-to-talk switch. Observe the pattern on the IP–173(*)/U scope.	*h.* The pattern should cover not more than 4 scale divisions, on each side of the 0 line.
			Set the ME–30(*)/U range selector switch to 10 VOLTS. While holding the H–33/PT push-to-talk switch depressed, adjust the TS–382(*)/U OUTPUT CONTROL clockwise until the ME–30(*)/U meter indicates 5 VOLTS. Observe the pattern on the IP–173(*)/U scope.	Pattern should not increase in width from that noted in *h* above.
			Release the push-to-talk switch.	None.

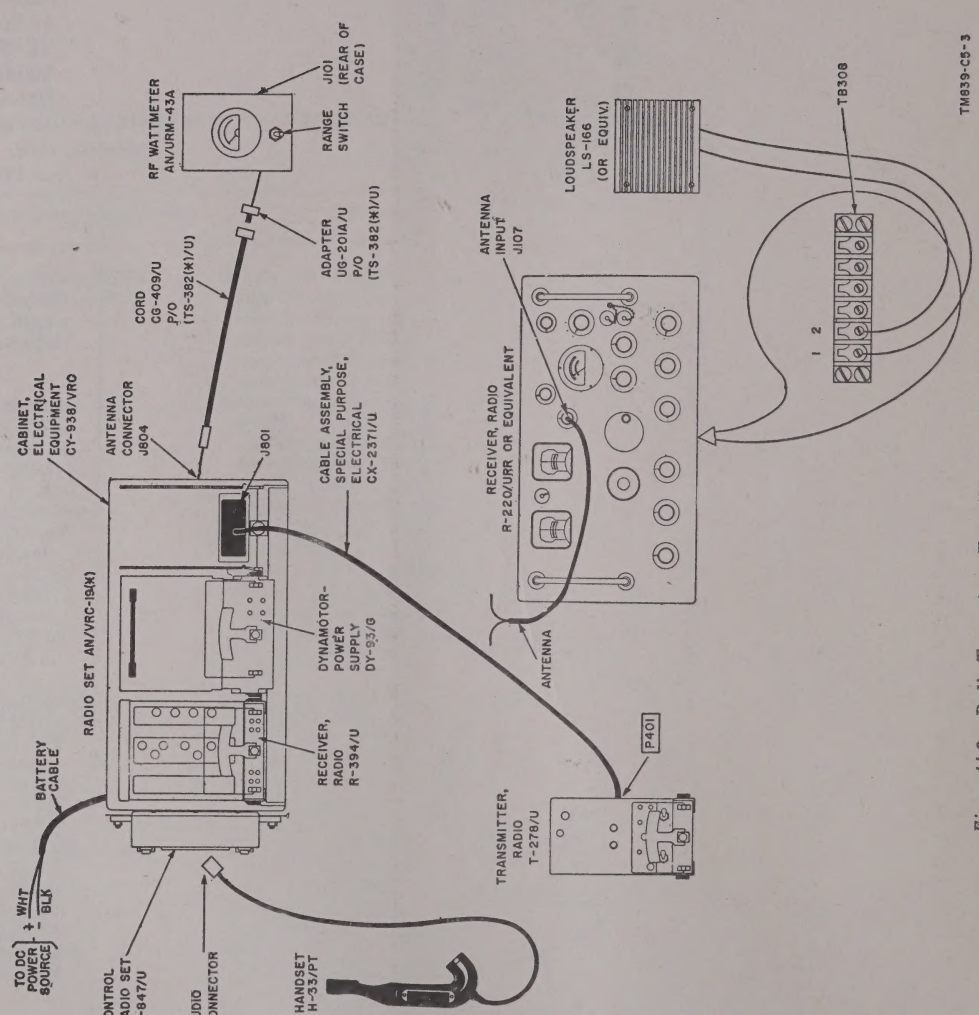

Figure 44.3. Radio Transmitters T-278/U and T-416/GR, operation tests.

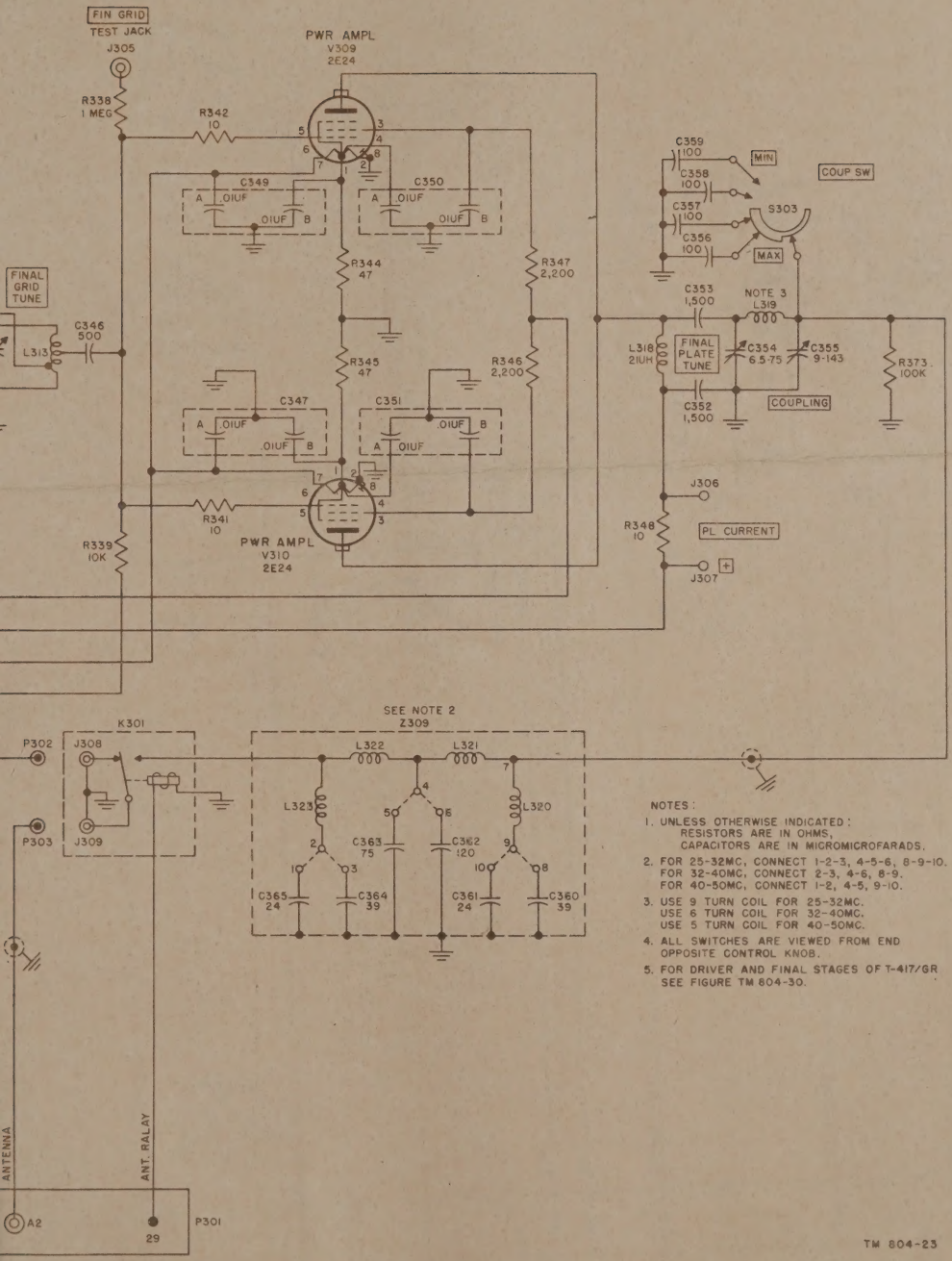

Figure 31. Radio Transmitter T-208/U and T-417/GR, schematic diagram.

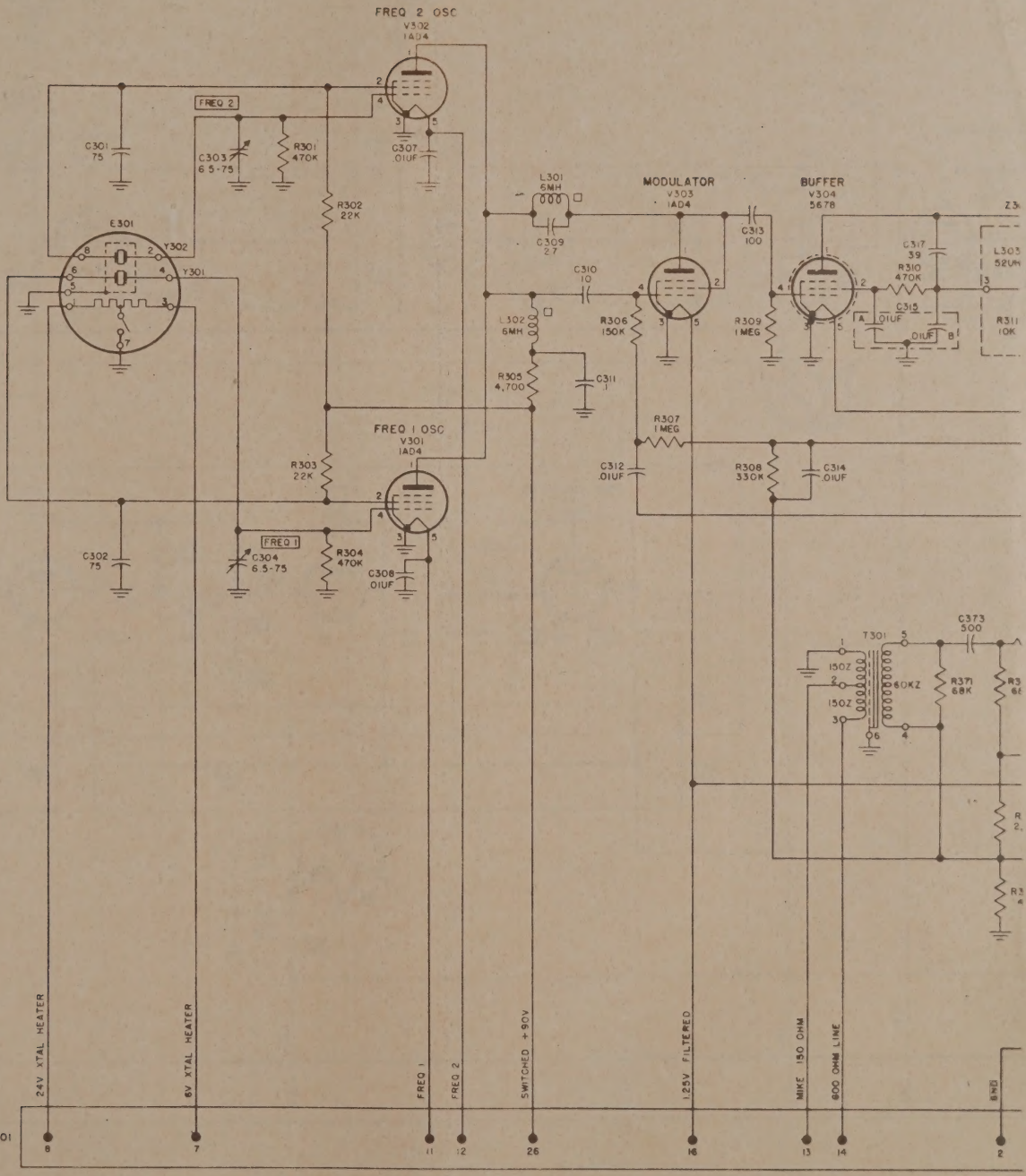
FREQ 2 OSC
V302
1AD4
FREQ 2
C301
75
C303
6.5-75
R301
470K
G307
.01UF
R302
22K
E301
Y302
Y301
L301
6MH
C309
2.7
MODULATOR
V303
1AD4
C313
100
BUFFER
V304
5678
C317
39
R310
470K
C315
.01UF
.01UF
L303
52UH
R311
10K
C310
10
L302
6MH
R306
150K
R309
1 MEG
R305
4,700
C311
R307
1 MEG
C312
.01UF
R308
330K
C314
.01UF
FREQ 1 OSC
V301
1AD4
R303
22K
FREQ 1
C304
6.5-75
R304
470K
C308
.01UF
C302
75
T301
C373
500
150Z
150Z
60KZ
R371
68K
24V XTAL HEATER
6V XTAL HEATER
FREQ 1
FREQ 2
SWITCHED +90V
125V FILTERED
MIKE 150 OHM
600 OHM LINE
GND
P301
8
7
11
12
26
16
13
14
2

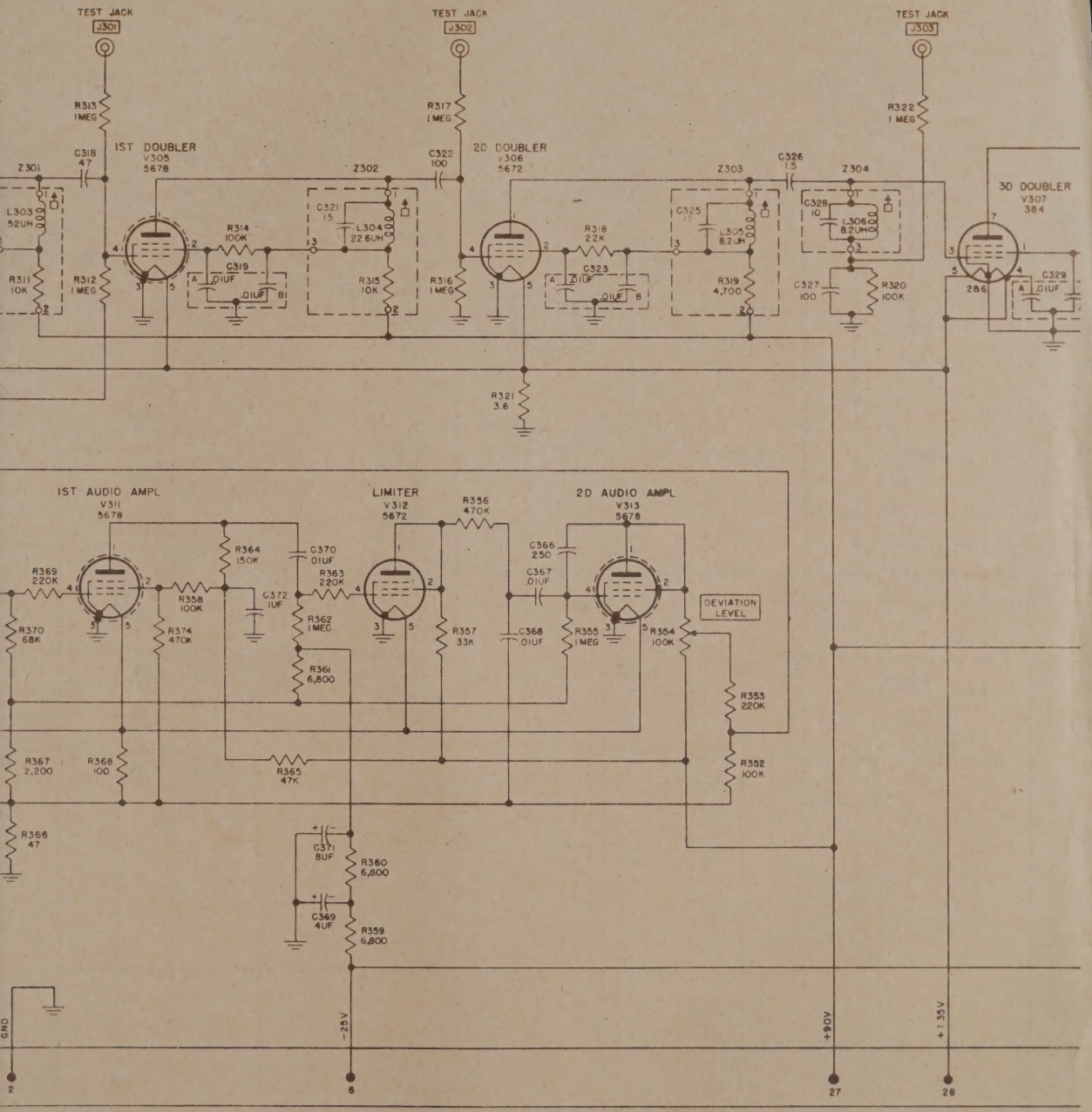
TEST JACK J301
TEST JACK J302
TEST JACK J303
R313 1MEG
R317 1MEG
R322 1 MEG
C318 47
IST DOUBLER V305 5678
C322 100
2D DOUBLER V306 5672
C326 1.5
3D DOUBLER V307 384
Z301
Z302
Z303
Z304
L303 52UH
C321 15
L304 22.6UH
R314 100K
C319 .01UF
.01UF
R311 10K
R312 1MEG
R315 10K
R316 1MEG
C325 12
L305 8.2UH
R318 22K
C323 .01UF
.01UF
R319 4,700
C328 10
L306 8.2UH
C327 100
R320 100K
C329 .01UF
286
R321 3.6
IST AUDIO AMPL V311 5678
LIMITER V312 5672
2D AUDIO AMPL V313 5678
R356 470K
R364 150K
C370 .01UF
R369 220K
R358 100K
C372 1UF
R363 220K
C366 250
C367 .01UF
DEVIATION LEVEL
R370 68K
R374 470K
R362 1MEG
R357 33K
C368 .01UF
R355 1MEG
R354 100K
R361 6,800
R353 220K
R367 2,200
R368 100
R365 47K
R352 100K
R366 47
C371 8UF
R360 6,800
C369 4UF
R359 6,800
GND
-25V
+90V
+135V
2
6
27
28

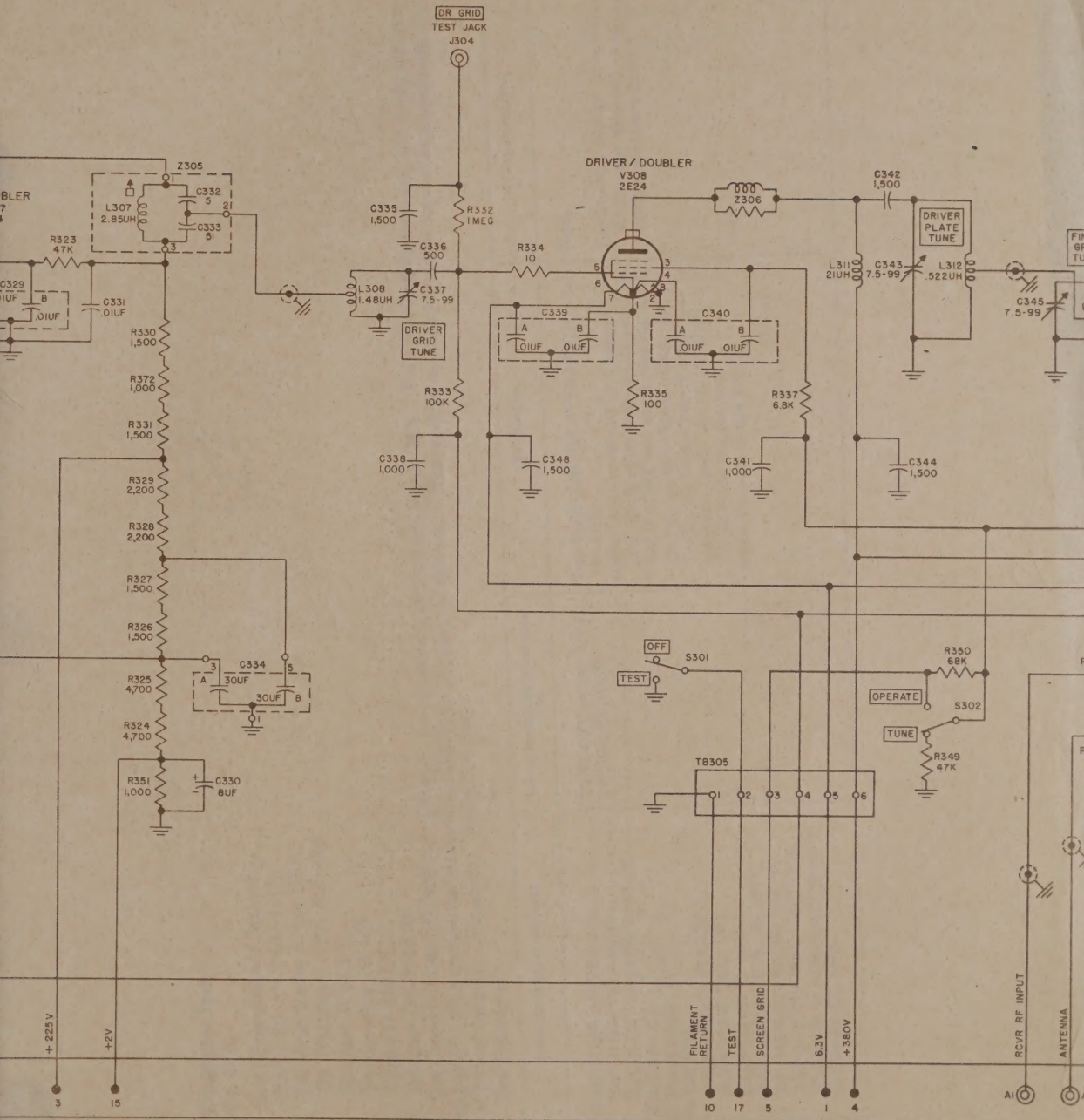
DR GRID
TEST JACK
J304
DRIVER / DOUBLER
V308
2E24
Z305
Z306
L307
2.85UH
C332
5
21
C333
51
C335
1,500
R332
1 MEG
C336
500
R334
10
L308
1.48UH
C337
7.5-99
DRIVER
GRID
TUNE
C339
C340
A
B
.01UF
.01UF
.01UF
.01UF
C342
1,500
DRIVER
PLATE
TUNE
L311
21UH
C343
7.5-99
L312
.522UH
C345
7.5-99
R323
47K
C329
.01UF
C331
.01UF
R330
1,500
R372
1,000
R331
1,500
R329
2,200
R328
2,200
R327
1,500
R326
1,500
R325
4,700
R324
4,700
R351
1,000
C330
8UF
C334
30UF
30UF
R333
100K
R335
100
R337
6.8K
C338
1,000
C348
1,500
C341
1,000
C344
1,500
OFF
S301
TEST
R350
68K
OPERATE
S302
TUNE
R349
47K
T8305
1
2
3
4
5
6
+225V
+2V
3
15
FILAMENT
RETURN
TEST
SCREEN GRID
6.3V
+380V
10
17
5
1
4
RCVR RF INPUT
ANTENNA
A1

70.8. Operation Tests

(fig. 44.3)

a. Test Equipment and Materials.

Radio Set AN/VRC–19(*).
Receiver, Radio R–220/URR.
RF Wattmeter AN/URM–43A.
Handset H–33/PT.
Loudspeaker LS–166.
Cord CG–409A/U.
Adapter UG–201A/U.

b. Test Connections and Conditions. Connect the equipment as shown in figure 44.3. Turn on all equipment and allow two minutes warmup period. The transmitter dust covers should be in place for this test. The receiver antenna should be located at a minimum distance of 50 feet from the Transmitter, Radio T–278/U.

c. Test Procedures.

Step No.	Control settings test equipment	Control settings equipment under test	Test procedure	Performance standard
1	C–847/U (p/o AN/VRC–19) VOLUME-OFF: midpoint SQUELCH: near noise threshold AN/URM–43A. Range switch: 60 W. R–220/URR. OPERATION: STANDBY. NOISE LIMITER: OFF. SELECTIVITY: 50 KC. BAND SELECTOR: BAND 7. RF GAIN SQUELCH: max. cw. AUDIO RESPONSE: MEDIUM. TUNING: to transmitter frequency. CALIBRATE: OFF.	TEST-OFF switch: OFF TUNE-OPR: OPR	Turn the R–220/URR OPERATION switch to AGC. Operate the transmitter in a normal manner. Depress the push-to-talk switch on the H–33/PT and speak into the handset microphone. Speak clearly and distinctly in a normal tone of voice while an assistant tunes the R–220/URR and listens to the transmission. Release the push-to-talk switch.	None. Transmission should be received clearly and distinctly with no extraneous noises evident. None.

70.9. Performance Standard Summary

Personnel may find it convenient to arrange test data in a manner similar to that shown below.

TEST DATA SHEET

RADIO TRANSMITTERS T–278/U AND T–416/GR

1. Power Output and Parasitic Oscillation:	*Test data*	*Performance standard*
a. Plate current		150 +5 ma.
b. Power output		20 watts minimum.
c. Parasitic oscillations		None.

2. Modulation:	*Test data*	*Performance standard*
a. Deviation		18 kc.
b. Limiting		18 kc maximum.

BY ORDER OF THE SECRETARIES OF THE ARMY AND THE AIR FORCE:

L. L. LEMNITZER,
General, United States Army,
Chief of Staff.

OFFICIAL:

R. V. LEE,
Major General, United States Army,
The Adjutant General.

THOMAS D. WHITE,
Chief of Staff, United States Air Force.

OFFICIAL:

J. L. TARR,
Colonel, United States Air Force,
Director of Administrative Services.

DISTRIBUTION:

Active Army:

USASA (2)
CNGB (1)
Tech Stf, DA (1) except CSigO (18)
Tech Stf Bd (1)
Army Maint Bd (1)
USCONARC (5)
USA Arty Bd (1)
USA Armor Bd (1)
USA Armor Bd Test Sec (1)
USA Inf Bd (1)
USA Air Def Bd (1)
USA Air Def Bd Test Sec (1)
USA Abn & Elct Bd (1)
USA Avn Bd (1)
USATB (1)
US ARADCOM (2)
US ARADCOM, Rgn (2)
OS Maj Comd (5)
OS Base Comd (5)
Log Comd (5)
MDW (1)
Armies (5) except First US Army (7)
Corps (2)
Div (2)
USATC (2)
Ft Belvoir (5)
Def Atomic Spt Agcy (5)
Yuma Test Sta (2)
USA Elct PG (1)
Svc Colleges (5)
Br Svc Sch (5) except USASCS (25), USASESCS (10)
Gen Dep (2) except Atlanta Gen Dep (None)
Sig Sec, Gen Dep (10)
Sig Depots (17)
AFIP (1)
WRAMC (1)
AMS (1)
Engr Maint Cen (1)
USA Comm Agcy (2)
USA Sig Engr Agcy (1)
USA Sig Eqp Spt Agcy (7)
USA Sig Msl Spt Agcy (13)
Trans Terminal Comd (1)
Army Terminals (1)
Port of Emb (OS) (2)
OS Sup Agcy (1)
Sig Fld Maint Shops (3)
Sig Lab (5)
USA Corps (Res) (1)
USASSA (15)
Midwestern Rgn Ofc (USASSA) (1)
JBUSMC (2)
USA Sig Pubs Agcy (8)
Army Pictorial Cen (2)
USA Ord Msl Comd (3)
Units organized under following TOE's:
11–15 (2)
11–32 (2)
11–95 (2)
11–96 (2)
11–117 (2)
11–155 (2)
11–500 AA–AE (2)
11–557 (2)
11–587 (2)
11–592 (2)
11–597 (2)

NG: None.
USAR: None.
For explanation of abbreviations used, see AR 320–50.

U.S. GOVERNMENT PRINTING OFFICE: 1959

DEPARTMENT OF THE ARMY TECHNICAL MANUAL
DEPARTMENT OF THE AIR FORCE TECHNICAL ORDER

TM 11-839
TO 31R2-2TRC28-1
C 4

RADIO TRANSMITTERS T-278/U AND T-416/GR

TM 11-839
TO 31R2-2TRC28-1
CHANGES No. 4

DEPARTMENTS OF THE ARMY
AND THE AIR FORCE
WASHINGTON 24, D.C., *16 February 1959*

TM 11-839/TO 31R2-2TRC28-1, 14 February 1955, is changed as follows:

Note. A parenthetical reference to previous Changes (example: "page 1 of C 2") indicates that pertinent material was published in that Change.

Page 12, paragraph 16*b*. Make the following changes:

Line 1. Change "Two" to: Three.

After the last sentence, add: A wattmeter, such as RF Wattmeter AN/URM-43A, is necessary to adjust the transmitter for maximum output.

Page 13, paragraph 18. Make the following changes:

Delete the first sentence and substitute: After performing preliminary transmitter adjustment, continue as follows (figure 10 shows location of controls and test points):

Delete paragraph *a* and substitute:

a. Final plate tuning capacitor C448 (C514) (figs. 37 and 41) is located near the plate caps of the power amplifier tubes. Loosen the locknut and turn the capacitor in (clockwise) until the plates touch. Turn the capacitor out (counterclockwise) to the operating frequency as indicated on the chart below. Tighten the locknut and replace the side panels.

Operating frequency (mc)	Capacitor setting (in counterclockwise turns)	Operating frequency (mc)	Capacitor setting (in counterclockwise turns)
152-158	1	166-170	3
158-162	1½	170-174	5
162-166	2		

Page 14, paragraph 18. Make the following changes:

Paragraph *h*. Change "(J501)" to: (J502).

Delete paragraph *m* and substitute:

m. Connect RF Wattmeter AN/URM-43A to the antenna terminal on the equipment cabinet.

Page 15, paragraph 18. Make the following changes:

Delete paragraphs *n* and *o*.

Paragraph *q*, line 2. Change "minimum indication on the voltmeter" to: maximum indication on the wattmeter.

Paragraph *r*, line 2. Change "voltmeter" to: wattmeter.

Paragraph *t*, line 2. Change "minimum indication on the voltmeter" to: maximum indication on the wattmeter.

Paragraph *u*, line 2. Change "voltmeter" to: wattmeter.

Paragraph *y*. Delete the first sentence.

Page 45, paragraph 60 (page 3 of C 3). Delete the chart and substitute:

Test equipment	Technical Manual
Electronic Multimeter TS-505/U, or equal.	TM 11-5511
Electron Tube Test Set TV-7/U	TM 11-5083
RF Wattmeter AN/URM-43A	TM 11-5133

Page 57, paragraph 69, line 5. Make the following changes:

Delete the sentence beginning with "To adjust" and substitute: To adjust these capacitors to obtain the exact desired frequencies, a frequency standard such as Frequency Meter AN/URM-81 (TM 11-5096) must be used. This meter is available only for depot maintenance. An approximate check (within .01 percent) may be made with Frequency Meter AN/URM-32 TM 11-5120).

Figure 44. Change Frequency Meter TS-174/U to: Frequency Meter AN/URM-81 or AN/URM-32.

Change Signal Generator TS-497A/URR to: Signal Generator AN/URM-70.

Page 58, paragraph 70. Delete subparagraph *a*(2) and substitute:

(2) Signal Generator AN/URM-70 (TM 11-1258), or equivalent, is necessary for the operation of the deviation monitor.

Page 59, paragraph 72. Make the following changes:

Paragraph *b*. After the last sentence, add: Radio Receiver R-394/U, or equivalent may be used.

Delete Paragraph *c*, and substitute:

c. Voltmeter. For deviation and audio response tests, two meters are necessary: Electronic Voltmeter ME-30B/U (TM 11-5132) and Electronic Multimeter TS-505/U (TM 11-5511), or equivalents.

Subparagraph *d* (page 5 of C 3). Delete the first sentence and substitute: The RF wattmeter used should be RF Wattmeter AN/URM-43A (TM 11-5133), or equivalent.

Paragraph 73. Delete the paragraph and substitute:

73. Deviation Limit Test

a. Connect the test equipment to the transmitter as shown in A, figure 45.

b. Set the frequency of Transmitter T-278/U or T-416/GR to 160 mc.

c. Connect Audio Oscillator TS-382A/U across the 600-ohm audio input terminals of the transmitter (par. 70*b*).

d. Set the audio oscillator to 1,000 cps and adjust for zero voltage output. Electronic Voltmeter ME-30B/U is connected to measure the output from the audio oscillator as it is varied.

e. Set Signal Generator AN/URM-70 to a frequency between 155 and 165 mc. With the transmitter operating, adjust the frequency of the signal generator until a signal appears on the screen of Panoramic Indicator IP-173/U. Center the carrier signal on the panoramic indicator screen.

f. Observe the modulation deviation indicated on the panoramic indicator. Increase the output of the audio oscillator until the carrier signal indicated on the panoramic screen passes through the zero value or null for the fifth time. (This will indicate a 15-kc deviation.) At this point, the output of the oscillator, as read on the electronic voltmeter, should not exceed .2 volt ac.

g. Increase the output of the audio oscillator until the carrier signal passes through zero or null for the sixth time. (This corresponds to an 18-kc deviation.) The audio input voltage necessary to obtain the sixth null should not be less than 5 volts ac.

Paragraph 74. Delete the paragraph and substitute:

74. Over-All Audio Response Test

a. Refer to B, figure 45. Connect the transmitter to the RF Wattmeter AN/URM-43A. Turn the TUNE-OPR switch on the transmitter to operate and set the transmitter to a frequency of 160 mc. For initial recordings, connect the Signal Generator AN/URM-70, Audio Oscillator TS-382A/U, and the test receiver as indicated by the blocks within the dashed outline.

b. Tune the receiver (with the unmodulated transmitter operating at 160 mc) obtain a reading of about +1 volt across one-half of the discriminator output (test point 5 on Radio Receiver R-394/U). Electronic Multimeter TS-505/U (not shown in figure 45) can be used to obtain the dc reading.

c. Adjust the signal generator to the receiver frequency (signal generator unmodulated). Adjust the signal generator output to 40 millivolts.

d. Connect the audio oscillator to the external modulation and ground terminals of the signal generator for external modulation. Adjust the frequency of the audio oscillator to 1,000 cps and the output level of the audio oscillator to give 15 kc deviation on the signal generator.

e. Connect an 8-ohm resistor across the output terminals of the receiver. Measure the receiver output across the resistor with Electronic Voltmeter ME-30B/U and adjust the receiver volume to obtain a 0 dbm or .775 volt ac reading.

f. Record the receiver outputs in dbm with the frequency of the audio oscillator set at 300 cycles and at 3,500 cycles, maintaining 15-kc frequency deviation and 40 millivolts output from the signal generator.

g. Turn off and disconnect the signal generator from the receiver. Disconnect the audio oscillator from the signal generator and connect it to the transmitter (par. 70*b*).

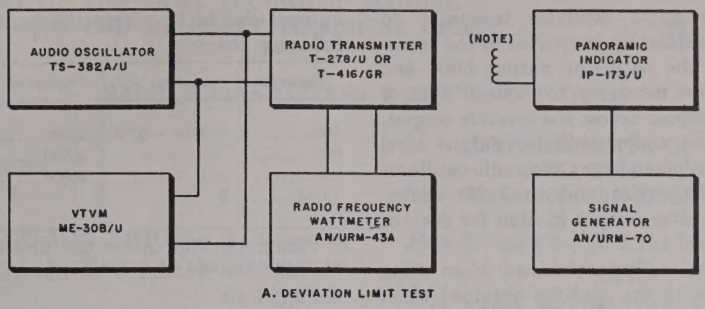

A. DEVIATION LIMIT TEST

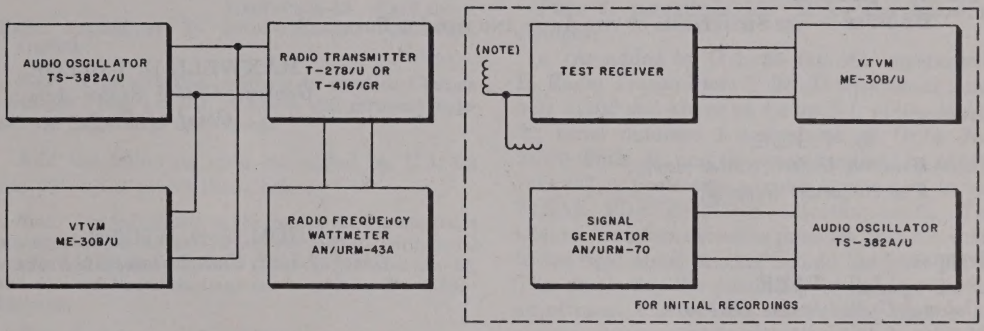

B. OVER-ALL AUDIO RESPONSE TEST

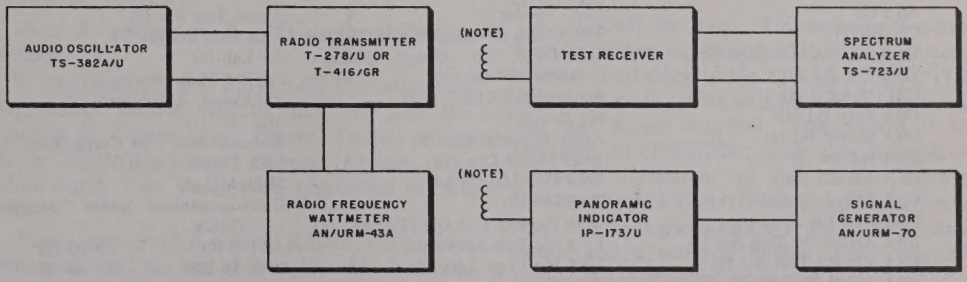

C. DISTORTION TEST

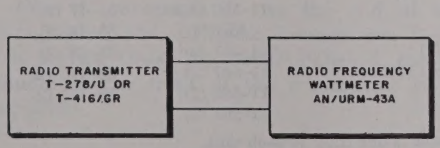

D. POWER OUTPUT TEST

NOTE:

INDICATES LOOSE COUPLING.

TM839-64-1

Figure 45. Radio Transmitters R-278/U and T-416/GR, final test, block diagrams.

h. Adjust the audio oscillator frequency so that 1,000 cps modulation is applied to the transmitter. Adjust the oscillator output level and record the amount necessary to cause 0 dbm or .775 volt ac to appear across the receiver output.

i. Maintain the audio oscillator output level at the value recorded and vary the audio oscillator frequency to 300 cycles and to 3,500 cycles, recording the receiver output in dbm for each of these frequencies.

j. Compare the readings obtained when using the transmitter with the readings obtained when using the signal generator. The difference in dbm (transmitter output minus signal generator output) should be within the limits given in the following chart:

Cycles/sec	dbm	Cycles/sec	dbm
300	−1 to −3.25	2,000	±1
500	±1	2,500	±1
800	±1	3,500	−1 to −5
1,000	0		

Paragraph 75*a*. After the first sentence, add: Connect the wattmeter to the transmitter for a dummy load.

Page 60. Delete figure 45 and substitute new figure 45.

[AG 413.44 (19 Jan 59)]

BY ORDER OF THE SECRETARIES OF THE ARMY AND THE AIR FORCE:

MAXWELL D. TAYLOR,
General, United States Army,
Chief of Staff.

OFFICIAL:

R. V. LEE,
Major General, United States Army,
The Adjutant General.

THOMAS D. WHITE,
Chief of Staff, United States Air Force.

OFFICIAL:

J. L. TARR,
Colonel, United States Air Force,
Director of Administrative Services.

DISTRIBUTION:

Active Army:

ASA (2)
CNGB (1)
Tech Stf, DA (1) except CSigO (30)
Tech Stf Bd (1)
USCONARC (5)
USA Arty Bd (1)
USA Armor Bd (1)
USA Inf Bd (1)
USA AD Bd (1)
USA Abn & Elct Bd (1)
USA Avn Bd (1)
USA Armor Bd Test Sec (1)
USA AD Bd Test Sec (1)
USA Arctic Test Bd (1)
US ARADCOM (2)
US ARADCOM, Rgn (2)
OS Maj Comd (5)
Log Comd (5)
MDW (1)
Armies (5)
Corps (2)
Div (2)
USATC (2)
Svc Colleges (5)
Br Svc Sch (5) except USASCS (25)
GENDEP (2) except Atlanta GENDEP (None)
Sig Sec, GENDEP (10)
Sig Dep (17)
Army Pictorial Cen (2)
Engr Maint Cen (1)
USA Ord Msl Comd (3)
TASSA (15)
Mid-Western Rgn Ofc (TASSA) (1)
USA Sig Pub Agcy (8)
USA Sig Engr Agcy (1)
USA Comm Agcy (2)
USA Sig Eqp Spt Agcy (2)
USA Sig Msl Spt Agcy (13)
WRAMC (1)
AFIP (1)
AMS (1)
Ports of Emb (OS) (2)
Trans Terminal Comd (2)
Army Terminals (2)
OS Sup Agcy (2)
Yuma Test Sta (2)
USA Elct PG (1)
Sig Lab (5)
Sig Fld Maint Shops (3)
Fld Comd, AFSWP (5)
Mil Dist (1)
Sector Comd, USA Corps (Res) (1)
USA Corps (Res) (1)
JBUSMC (2)
Units organized under following TOE's:
11-7 (2)
11-16 (2)
11-18 (2)
11-57 (2)
11-127 (2)
11-128 (2)
11-500 (AA-AE) (2)
11-557 (2)
11-587 (2)
11-592 (2)
11-597 (2)
19-55 (2)
19-56 (2)
19-57 (2)
19-217 (2)
19-500 (AA-AE) (2)
55-17 (2)
55-18 (2)
55-28 (2)
55-116 (2)
55-137 (2)

NG: State AG (3); units—same as Active Army except allowance is one copy to each unit.
USAR: None.
For explanation of abbreviations used, see AR 320-50.

U. S. GOVERNMENT PRINTING OFFICE: 1959

DEPARTMENT OF THE ARMY TECHNICAL MANUAL
DEPARTMENT OF THE AIR FORCE TECHNICAL ORDER

*TM 11-839
TO 31R2-2TRC28-1
C 3

RADIO TRANSMITTERS T-278/U AND T-416/GR

TM 11-839
TO 31R2-2TRC28-1
CHANGES No. 3

DEPARTMENTS OF THE ARMY
AND THE AIR FORCE
WASHINGTON 25, D. C., *17 March 1958*

TM 11-839/TO 31R2-2TRC28-1, 14 February 1955, is changed as indicated so that the manual also applies to:

Nomenclature	*Order No.*	*Serial No.*
Radio Transmitters T-278/U and T-416/GR.	21506-Phila-55 and 11661-Phila-52.	1 and above.
Radio Transmitter T-416/GR.	50967-Phila-57	1 and above.

Note. A parenthetical reference to previous Changes (example: "page 1 of C 2") indicates that pertinent material was published in that Change.

Add the following note (as added by C 1, 23 Jan 56) in the places listed below:

Note. The bail handle, at the front of the transmitter, is not supplied on Radio Transmitter T-278/U with serial numbers 13100 and above on Order No. 11661-Phila-52, and with serial numbers 1 and above on Order No. 21506-Phila-55.

Page 5, paragraph 7. After *b*.
Page 12, figure 10.
Page 17, figure 12.
Page 53, figure 39.

Page 3, paragraph 2. Make the following change:

b. (Superseded) DA Form 468, Unsatisfactory Equipment Report, will be filled out and forwarded to Commanding Officer, United States Army Signal Equipment Support Agency, Fort Monmouth, New Jersey, as prescribed in AR 700-38.

Page 4, paragraph 5, column 2, item 10 (Spurious emission). At the end of item 10, add: In Radio Transmitters T-416/GR bearing Order No. 50967-Phila-57, spurious emissions are attenuated at least 60 db below the carrier.

Page 5, paragraph 7. At the end of subparagraph *b*, add: In Radio Transmitters T-416/GR bearing Order No. 50967-Phila-57, the bail handle at the front of the transmitter is not supplied.

Page 5, figure 3. Add the following note:

NOTE:

IN RADIO TRANSMITTERS T-416/GR BEARING ORDER NO. 50967-PHILA-57, DESIGNATION P401 IS CHANGED TO P401/P501.

Page 6, paragraph 10. Make the following changes:

e. (As added by C 1, 23 Jan 56; superseded) In Radio Transmitters T-278/U with serial numbers 11205 and above on Order No. 11661-Phila-52, serial numbers 1 and above on Order No. 21506-Phila-55, and those sets modified by MWO SIG 187, a protective adapter is attached to the FINAL PLATE TUNE adjusting shaft. The adapter transfers excessive pressure from the shaft to the rigid metal bracket behind the front panel. This eliminates the possibility of damage during adjustment, and provides easier tuning when using a screw driver or a hexagonal wrench.

Subparagraph *g* (page 1 of C 2). After "Phila-55" add: and those sets modified by MWO SIG 187.

h. (Added) In Radio Transmitters T-416/GR bearing Order No. 50967-Phila-57, a protective adapter is attached to the FINAL PLATE TUNE adjusting shaft. The bail handle at the front of the unit is not supplied. Designation P401 is changed to P401/P501 and the nameplate is moved to the rear of the unit. Tubes V406 and V407 are type 6AK6. The nameplate is removed from the front panel and is replaced by a caution notice and a warning notice. Only two Allen wrenches are supplied as special tools.

Page 7, figure 4 (page 1 of C 2). Note 2, line 3. After "Phila-55", add: AND ORDER NO. 50967-PHILA-57.

Page 8, paragraph 14. Add the following note after *a* (2) (as added by C 1, 23 Jan 56):

Note. In Radio Sets AN/VRC-19 (*) on Order No. 21506-Phila-55, the control cable is attached to the equipment cabinet during the manufacturing process.

*These changes supersede C 1, 23 January 1956.

Page 9, paragraph 14. Add the following after *a*(3) (as added by C 1 23 Jan 56):

Note. In Radio Sets AN/VRC-19 (*) on Order No. 21506-Phila-55, also place a jumper between terminals 9 and 10 of TB802.

Page 10, figure 7. Make the following changes (as made by C 1, 23 Jan 56):

Draw a dashed line between terminals 9 and 10 on terminal board TB802.

Add the words "SEE NOTE 2" with an indicating arrow over the dashed line.

Add the following to note 2: IN EQUIPMENTS ON ORDER NO. 21506-PHILA-55, A JUMPER BETWEEN TERMINALS 9 AND 10 IS ALSO REQUIRED FOR NORMAL OPERATION.

Page 14, paragraph 18*d*, chart. Make the following changes (as changed by C 1, 23 Jan 56):

"Normal voltage (dc volts)" column, item 1. Change "−5" to: **−4 to −5.**

"Adjustments" column, item 1, line 5. Delete the remainder of the sentence after "meter indicates" and substitute: −4 to −5 volts dc.

Page 17, figures 12 and 13. Add the following note:

NOTE:

IN RADIO TRANSMITTERS T-416/GR BEARING ORDER NO. 50967-PHILA-57, THE BAIL HANDLE AT THE FRONT OF THE TRANSMITTER IS NOT SUPPLIED. THE NAMEPLATE HAS BEEN REMOVED AND IS REPLACED WITH A CAUTION NOTICE AND A WARNING NOTICE. THE WORDS "FINAL GRID TUNE" HAVE BEEN MOVED FROM THE CENTER OF THE FRONT PANEL TO NEW POSITIONS DIRECTLY BELOW THE CONTROL SHAFTS OF C508 AND C509.

Page 21, paragraph 32. At the end of subparagraph *c*, add: In Radio Transmitters T-416/GR bearing Order No. 50967-Phila-57, only two Allen wrenches (No. 4 and No. 6) are supplied.

Page 22, paragraph 37*b*. Add the following note (this supersedes the note added by C 1, 23 Jan 56):

Note. In Radio Transmitters T-278/U with serial numbers 11205 and above on Order No. 11661-Phila-52, with serial numbers 1 and above on Order No. 21506-Phila-55, in Radio Transmitters T-416/GR bearing Order No. 50967-Phila-57, and in those sets modified by MWO SIG 178 and MWO SIG 178 C1, be sure that the protective adapter is firmly attached to the FINAL PLATE TUNE control.

Page 25, paragraph 42*b*, line 5. (As changed by C 1, 23 Jan 56.) After "TM-226" add: TM 11-297.

Page 28, figure 18. Make the following changes:

Add "SEE NOTE" below "3B4" in the "3D DOUBLER" and "4TH DOUBLER" stages.

Add the following note:

NOTE:

IN RADIO TRANSMITTERS T-416/GR BEARING ORDER NO. 50967-PHILA-57, AND IN THOSE SETS MODIFIED BY MWO SIG 187 DATED 12 JULY 1955, V406 AND V407 ARE 6AK6 TUBES.

Page 31, figure 21. Note 2. Change line 2 (as changed by C 1, 23 Jan 56) to:

SERIAL NUMBERS 496 THROUGH 12645 ON ORDER NO. 11661-PHILA-52, AND 1 AND ABOVE ON ORDER NO. 21506-PHILA-55.

Page 33, figure 23. Make the following changes (as changed by C 1, 23 Jan 56):

Under the resistor values for R421, R471, and R422 add: (2200*). Change line 2 of note 2 to:

SERIAL NUMBERS 496 THROUGH 12645 ON ORDER NO. 11661-PHILA-52, AND 1 AND ABOVE ON ORDER NO. 21506-PHILA-55.

Add the following to the notes:

3. *INDICATES RESISTOR VALUE IN RADIO TRANSMITTERS T-416/GR.

Page 33, figure 23.1 (page 2 of C 2). In the caption, after "Phila-55", add: or Order No. 50967-Phila-57.

Page 35, figure 25.1 (page 2 of C 2). Change the caption to:

Figure 25.1. **Radio Transmitters T-416/GR bearing Order No. 32046-Phila-55 or Order No. 50967-Phila-57, and those sets modified by MWO SIG 187, fourth doubler and fifth doubler and driver, simplified schematic diagram.**

Page 38, paragraph 51*a*, note (as changed by C 1, 23 Jan 56). After "600 and below" insert: on Order No. 11661-Phila-52.

Page 38, figure 29. Make the following additions (as added by C 1, 23 Jan 56):

Under the resistor values for R421, R471, and R422, add: (2200*).

Add the following to the notes:

3. *INDICATES RESISTOR VALUE IN RADIO TRANSMITTER T-416/GR.

Figure 29.

NOTE 4. (As added by C2, 24 Jun 57; superseded) IN RADIO TRANSMITTERS T-416/GR, BEARING ORDER NO. 32046-PHILA-55 OR ORDER NO. 50967-PHILA-57, AND THOSE SETS MODIFIED BY MWO SIG 187, V406 AND V407 SCHEMATIC DIAGRAMS AND PIN NUMBERS ARE CHANGED FROM 3B4 TUBES TO 6AK6 TUBES.

Page 39, paragraph 55, After the last sentence add: In Radio Transmitters T-416/GR bearing Order No. 50967-Phila-57, and in those sets modified by MWO SIG 187, V406 and V407 filament voltage is obtained through P501, pin 1. Resistor R511 (2 ohms) is added from P501, pin 28 to ground to maintain the same current through pin 28 as was drawn previously by V406 and V407.

Page 40, figure 30.1 (page 3 of C2). Make the following changes:

Add the words "SEE NOTE" near "R410".

Add the following note.

NOTE:

IN RADIO TRANSMITTERS T-416/GR BEARING ORDER NO. 50967-PHILA-57, R410 IS DESIGNATED AS R511 (2 OHMS).

After "Phila-55", in the caption add: **or Order No. 50967-Phila-57.**

Page 41, figure 31. Change line 2 in note 2 (as changed by C1, 23 Jan 56) to: **SERIAL NUMBERS 496 THROUGH 12645 ON ORDER NO. 11661-PHILA-52, AND 1 AND ABOVE ON ORDER NO. 21506-PHILA-55.**

Figure 34. Add the following to the notes (page 4 of C2):

13. IN RADIO TRANSMITTERS T-416/GR BEARING ORDER NO. 50967-PHILA-57, THE VOLTAGE AND RESISTANCE MEASUREMENTS AT V406 AND V407 ARE LISTED BELOW:

Pin No.	V406		V407	
	Voltage	Resistance	Voltage	Resistance
1	−30V**	100K	−70V***	100K
2	0V	0	0V	0
3	6.3V AC	.35	6.3V AC	.35
4	0V	0	0V	0
5	150V*	24K	160V*	24K
6	142	29K	160V	29K
7	0V	0	0V	0

*SEE NOTE 8.
**MEASURED AT J403.
***MEASURED AT J404.

Page 45, paragraph 60, chart. Make the following changes (as changed by C 1, 23 Jan 56):

Delete the second and third items and the associated technical manuals, and insert the following:

In the Test equipment column, insert: Electron Tube Test Set TV-7/U.

In the Technical manual column, insert: TM 11-5083.

Page 46, figure 35. Make the following changes in figure 35:

Add the following voltage and resistance measurements at the indicated points on TB404.

Measurements	Add near
150/24K (SEE NOTE 6)---	130V/22K (open end of R421).
178/21K (SEE NOTE 6)--	165V/20K (junction of R421 and R471).
201V/24K (SEE NOTE 6)--	180V/19K (junction of R427 and R472).
184V/21K (SEE NOTE 6)--	155V/20K (junction of R472 and R426).
160V/20K (SEE NOTE 6)--	110V/22K (open end of R426).

Add the following to the notes:

6. VOLTAGE AND RESISTANCE MEASUREMENTS IN RADIO TRANSMITTERS T-416/GR BEARING ORDER NO. 50967-PHILA-57.

7. THE BAIL HANDLE AT THE FRONT OF THE UNIT IS NOT SUPPLIED IN RADIO TRANSMITTERS T-416/GR BEARING ORDER NO. 50976-PHILA-57.

Page 47, paragraph 64, chart, Symptom column. Make the following changes:

At the end of item 4, add: No filament voltage for tubes V403 through V405 or V411 through V413, in Radio Transmitters T-416/GR bearing Order No. 50967-Phila-57.

At the end of item 5, add: No filament voltage for tubes V405, V406, V408, (V501) V409, and V410 (V502) in Radio Transmitters T-416/GR bearing Order No. 50967-Phila-57.

Page 50, figure 36. Add the following note:

NOTE:

IN RADIO TRANSMITTERS T-416/GR BEARING ORDER NO. 50967-PHILA-57, R410 IS DELETED AND R511 (2 OHMS) IS ADDED AT THE LEFT EDGE OF TB402.

Page 51, figure 37. Add the following note:

NOTE:

IN RADIO TRANSMITTERS T-416/GR BEARING ORDER NO. 50967-PHILA-57, R511 (2 OHMS) IS ADDED AT THE LEFT EDGE OF TB402.

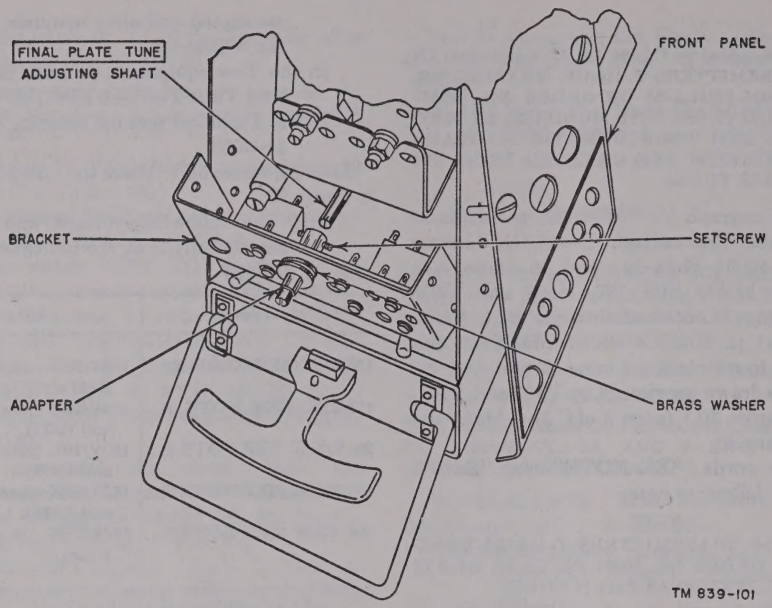

Figure 43.1. (As added by C 1, 23 Jan 56) *Protective adapter for FINAL PLATE TUNE adjusting shaft.*

Page 57, paragraph 67.1 (As added by C 1, 23 Jan 56; superseded):

67.1. Final Plate Tune Adapter

In Radio Transmitters T–278/U with serial numbers 11205 and above on Order No. 11661–Phila–52, and with serial numbers 1 through 4800 on Order No. 21506–Phila–55, and Radio Transmitter T–416/GR bearing Order No. 50967–Phila–57, a protective adapter is fastened to the FINAL PLATE TUNE adjusting shaft by two setscrews. A brass washer is installed between the adapter and the bracket at the lower front of the transmitter (fig. 43.1). To attach the adapter, use the following procedures:

a. Detach the front panel.

b. Remove the four screws that hold the bracket to the sides of the transmitter chassis. Slightly pull the bracket forward.

c. Turn in the two Allen setscrews on the adapter. Insert the adapter into the bracket. Place the brass washer between the adapter and the bracket.

d. Loosen the Allen setscrews so that the adjusting shaft will fit into the adapter.

e. Push the bracket into place and, at the same time, slip the adapter over the end of the FINAL PLATE TUNE adjusting shaft.

f. Attach the bracket to the chassis. Fasten the adapter to the adjusting shaft by tightening the setscrews.

g. Replace the front panel.

h. To remove the adapter, detach the front panel and remove the two setscrews from the adapter.

Page 58, paragraph 70*b*

(1) (As superseded in C 1, 23 Jan 56) Set the RF signal generator to approximately 160.075 mc and the transmitter to 165.075 mc. Turn on the deviation monitor and the RF signal generator.

(2) (As superseded in C 1, 23 Jan 56) Set the audio oscillator to a frequency of 1,000 cycles, and the output to 0 volt.

Add the following note after (4):

Note. (As added by C 1, 23 Jan 56) Dynamotors contained in power supplies on Order No. 21506–Phila–55 are the continuous-duty type and are not necessarily limited to a duty cycle of 3 minutes on and 12 minutes off. Unnecessary continuous operation, however, is

to be avoided since it will shorten the life of the brushes and the dynamotor.

(5) (As superseded by C 1, 23 Jan 56) Adjust the RF signal generator frequency until a signal appears on the screen of the deviation monitor. Turn up the output level of the audio oscillator to 0.2 volt. Notice the number of times the signal passes through the zero value.

(6) (As superseded by C 1, 23 Jan 56) Adjust DEVIATION LEVEL control R452 (fig. 10) on the transmitter, until the signal on the deviation monitor shows the transmitter carrier frequency at zero for the fifth time.

Page 59, paragraph 72*d*. Change the first sentence (as changed by C 1, 23 Jan 56) to: The RF wattmeter used should be RF Wattmeter AN/URM-43, or equivalent.

Page 59, paragraph 73*c*. Make the following changes (as changed by C 1, 23 Jan 56):

Last sentence. Change "15 kc" to: **18 kc.**

After the last sentence add: (This is indicated by the carrier frequency passing through the zero value for the sixth time as the audio voltage is increased from 0 volt to 5 volts.)

Figure 48. Make the following changes (as changed by C 1, 23 Jan 56):

Change the value of C451, at V409, to: **4-23 UUF.**

NOTE 2, line 2. After "496" delete "OR ABOVE" and insert:

THROUGH 12645 ON ORDER NO. 11661-PHILA-52, AND 1 AND ABOVE ON ORDER NO. 21506-PHILA-55.

Figure 49. Make the following changes:

Add "SEE NOTE 4" near R410.

Add "SEE NOTE 4" near R425.

Add "SEE NOTE 4" near V406 and V407.

Add R511 (2 ohms) from P501, pin 28, to ground and add: "SEE NOTE 4" near R511.

(As changed by C 1, 26 Jan 56), change the value of R414 to: **680K.**

Add the following to the notes:

4. IN RADIO TRANSMITTERS T-416/GR BEARING ORDER NO. 50967-PHILA-57, OR THOSE SETS MODIFIED BY MWO SIG 187, R410 HAS BEEN DELETED, R425 IS CHANGED FROM 4,700 TO 1,000 OHMS, R511, 2 OHMS, IS ADDED FROM P501, PIN 28 TO GROUND, V406 AND V407 ARE CHANGED FROM TUBE TYPE 3B4 TO TUBE TYPE 6AK6 (FIG. 23.1 AND 25.1). THE FILAMENT VOLTAGE FOR V406 AND V407 IS OBTAINED FROM P501, PIN 1.

[AG 413.44 (24 Feb 58)]

DEPARTMENT OF THE ARMY TECHNICAL MANUAL **TM 11-839**
DEPARTMENT OF THE AIR FORCE TECHNICAL ORDER **TO 31R2-2TRC28-1**
C 2

RADIO TRANSMITTERS T-278/U AND T-416/GR

TM 11-839
TO 31R2-2TRC28-1
CHANGES No. 2

DEPARTMENTS OF THE ARMY
AND THE AIR FORCE
WASHINGTON 25, D. C., *24 June 1957*

TM 11-839/TO 31R2-2TRC28-1, 14 February 1955, is changed as follows:

This information changes TM 11-839/TO 31R2-2TRC28-1 so that the manual also applies to the following equipment:

Nomenclature	*Order No.*	*Serial No.*
Radio Transmitter T-278/U.	21506-Phila-55	2178 and above.
Radio Transmitter T-416/GR.	32046-Phila-55	1 and above.

Add the following note in the following places in the manual:

Note. The bail handle, at the front of the transmitter, is not supplied on Radio Transmitter T-416/GR bearing Order No. 32046-Phila-55.

Page 2, figure 1.

Page 5, paragraph 7, after *b*.

Facing page 13, figure 10.

Page 17, figures 12 and 13.

Page 46, figure 35.

Page 56, figure 43.

Page 6, paragraph 10 (page 1 of C 1).

f. (Added) Radio Transmitters T-278/U with serial No. 2178 and above bearing Order No. 21506-Phila-55 incorporate a new type relay K401, the contacts of which are reversed with respect to the relays on the earlier model equipments. For details, see paragraph 66.

g. (Added) In Radio Transmitters T-416/GR bearing Order No. 32046-Phila-55 tubes V406 and V407 are 6AK6 tubes.

Page 7, figure 4.

Change the word "NOTE" to: **NOTES.** Number the existing note "1."

2. (Added) IN RADIO TRANSMITTERS T-416/GR BEARING ORDER NO. 32046-PHILA-55, V406 AND V407 ARE 6AK6 TUBES.

Page 30, figure 19.

Add C465 with a value of 10 in parallel with FREQ 1 control C403.

Add C464 with a value of 10 in parallel with FREQ 2 control C404.

Page 30, paragraph 47*b*, line 10. Delete "not".

Page 32, paragraph 48.

a, line 1. Change "(fig. 27)" to: **(fig. 21).**

b, line 1. Change "(fig. 23)" to: **(figs. 23 and 23.1).**

c, line 1. Change "(fig. 23)" to: **(figs. 23 and 23.1).**

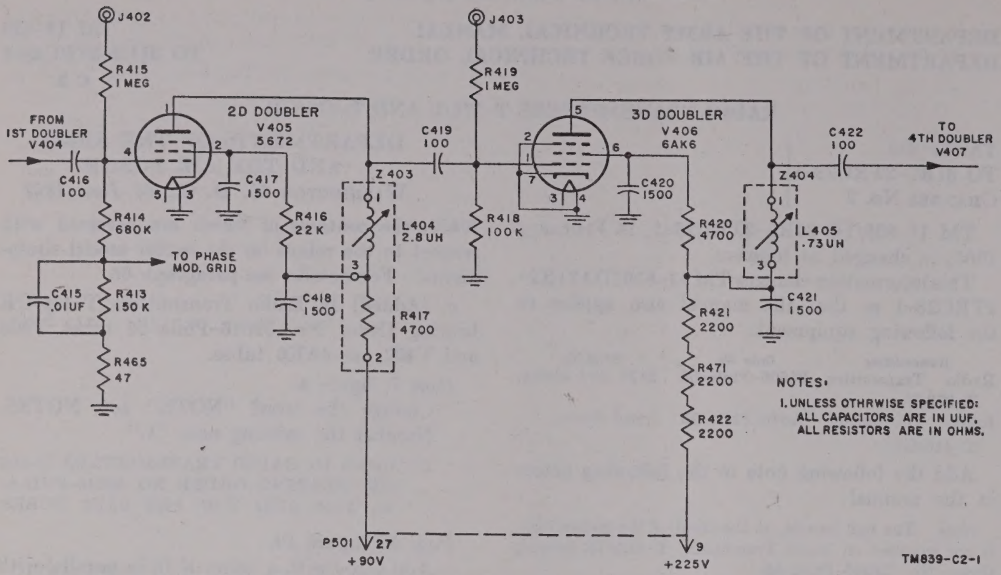

Figure 23.1. (Added) *Radio Transmitter T-416/GR, bearing Order No. 32046-Phila-55, second and third doublers, simplified schematic.*

Page 35, paragraph 48*e*(2), line 1. Change "(fig. 25)" to: **(figs. 25 and 25.1).**

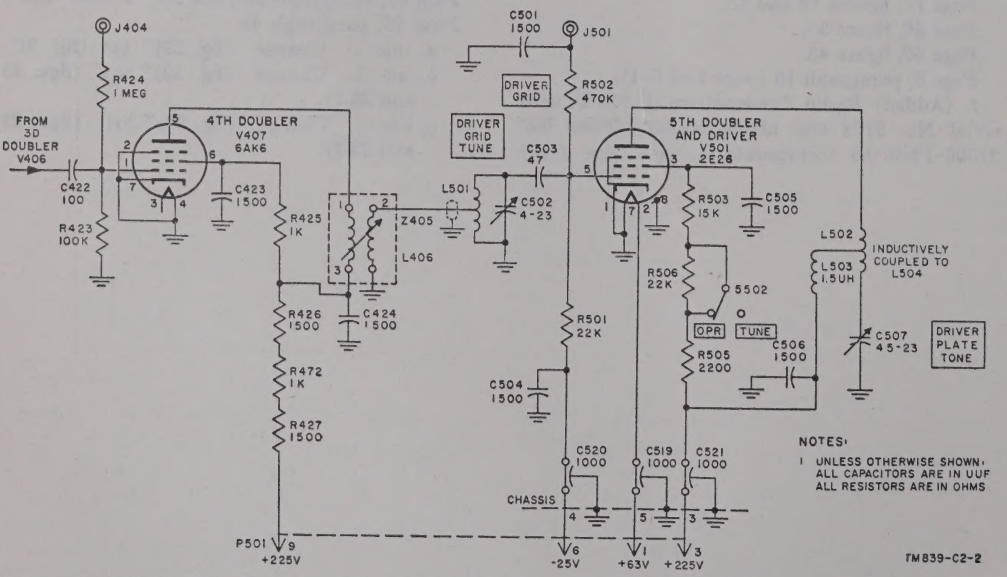

Figure 25.1. (Added) *Radio Transmitter T-416/GR, bearing Order No. 32046-Phila-55, fourth doubler and fifth doubler and driver, simplified schematic.*

Facing page 36, figure 26 (fold-out). At J411 and J412, add: SEE NOTE 3.

3. (Added) IN RADIO TRANSMITTERS T-278/U WITH SERIAL NUMBERS 2178 THROUGH 2377 ON ORDER NO. 21506-PHILA-55, J411 (ON THE SCHEMATIC) IS: J412; IN RADIO TRANSMITTERS T-278/U WITH SERIAL NUMBERS 2378 AND ABOVE ON ORDER NO. 21506-PHILA-55, THE MARKING ON THIS SAME JACK IS: RCVR. IN RADIO TRANSMITTERS T-278/U WITH SERIAL NUMBERS 2178 THROUGH 2377 ON ORDER NO. 21506-PHILA-55, J412 IS: J411; IN RADIO TRANSMITTERS T-278/U WITH SERIAL NUMBERS 2378 AND ABOVE ON ORDER NO. 21506-PHILA-55, THE MARKING ON THIS SAME JACK IS: ANT.

Page 38, paragraph 50, last line. After "J412," add: (in Radio Transmitters T-278/U with serial numbers 2178 through 2377 on Order No. 21506-Phila-55, read "J412" as J411; in Radio Transmitters T-278/U with serial numbers 2378 and above on Order No. 21506-Phila-55, read this same jack as ANT jack).

Page 38, figure 28, note 3, second line. After "NUMBERED BELOW 601," add: ON ORDER NO. 11661-PHILA-52.

Facing page 38, figure 29 (fold-out) (page 2 of C 1).

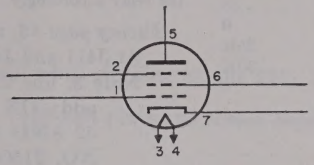

TM839-C2-4

NOTE 4. (ADDED) RADIO TRANSMITTER T-416/GR, BEARING ORDER NO. 32046-PHILA-55, SCHEMATIC DIAGRAM AND PIN NUMBERS OF 6AK6 TUBES FORMERLY 3B4 TUBES, V406 AND V407.

Page 39, paragraph 55, heading. Change "(fig. 30)" to: **(figs. 30 and 30.1).**

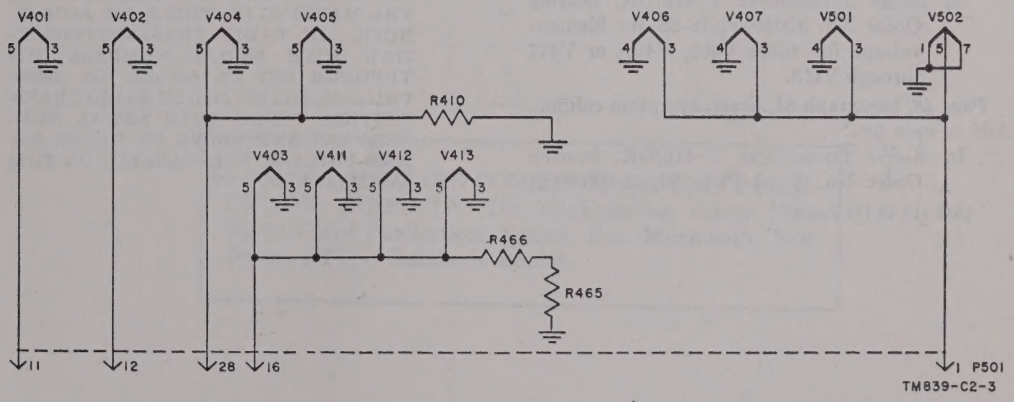

TM839-C2-3

Figure 30.1. (Added) *Radio Transmitter T-416/GR, bearing Order No. 32046-Phila-55, filament voltage distribution, simplified schematic.*

Page 44, paragraph 59*b*, line 9. Change "(figs. 48 and 49)" to: **(figs. 48, 49, and 49.1).**

Facing Page 44, figure 34 (fold-out).

12. (Added) IN RADIO TRANSMITTER T-416/GR, BEARING ORDER NO. 32046-PHILA-55, THE RESISTANCE READINGS AT PIN 5 OF V401 AND V402 IS 3. THE VOLTAGE AND RESISTANCE READINGS FOR V405 AND V406 ARE LISTED BELOW:

Pin-No.	V405		V406	
	Voltage	Resistance	Voltage	Resistance
1	−85V	110K	**−30V	110K
2	0V	0	0V	0
3	6.3V AC	.35	6.3V AC	.35
4	0V	0	0V	0
5	*170V	25K	*160V	25K
6	165V	25K	150V	30K
7	0V	0	0V	0

*SEE NOTE 8.
**MEASURED AT J403.

Page 47, paragraph 64, line 19. Change "(figs. 29, 30 and 31)" to: **(figs. 29, 30, 30.1, and 31).**

Page 47, paragraph 64, chart, symptom column. Add to item 4:

In Radio Transmitter T-416/GR, bearing Order No. 32046-Phila-55, no filament voltage for tubes V403, V404, or V411 through V413.

Page 48, paragraph 64, chart, symptom column. Add to item 5:

In Radio Transmitter T-416/GR, bearing Order No. 32046-Phila-55, no filament voltage for tubes V405, V406, V501, and V502.

Page 48, paragraph 64, chart, trouble column. In the note following item 19 after "serial numbered 600 or below," add: on Order No. 11661-Phila-52.

Page 54, paragraph 66*f*.

Note. (Added) Radio Transmitters T-278/U with serial numbers 2178 and above on Order No. 21506-Phila-55 incorporate a new type relay K401, the contacts of which are reversed with respect to those on the earlier relay. Since both the old relay (Motorola part No. 280C1017) and the new relay (Motorola part No. 280C4298) may be available as spare parts, it will be necessary, when replacing relay K401, to note the relay part number and to connect the relay accordingly.

Facing page 62, figure 48 (fold-out).

At J411 and J412 add: SEE NOTE 5.

Note 3, line 2. After "601 OR HIGHER," add: ON ORDER NO. 11661-PHILA-52 AND 1 OR HIGHER ON ORDER NO. 21506-PHILA-55.

5. (Added) IN RADIO TRANSMITTERS T-278/U WITH SERIAL NUMBERS 2178 THROUGH 2377 ON ORDER NO. 21506-PHILA-55, J411 IS: J412; IN RADIO TRANSMITTERS T-278/U WITH SERIAL NUMBERS 2378 AND ABOVE ON ORDER NO. 21506-PHILA-55, THE MARKING ON THIS SAME JACK IS: RCVR. IN RADIO TRANSMITTERS T-278/U WITH SERIAL NUMBERS 2178 THROUGH 2377 ON ORDER NO. 21506-PHILA-55, J412 IS: J411; IN RADIO TRANSMITTERS T-278/U WITH SERIAL NUMBERS 2378 AND ABOVE ON ORDER NO. 21506-PHILA-55, THE MARKING ON THIS SAME JACK IS: ANT.

[AG 413.44 (18 Jun 57)]

WARNING

DANGEROUS VOLTAGES EXIST IN THIS EQUIPMENT

Be careful when working on the 225-, 250-, 275-, 380-, and 450-volt plate and screen supply circuits.

DON'T TAKE CHANCES!

NOTE: FORWARD COMMENTS ON THIS PUBLICATION DIRECTLY TO: Commanding Officer, The Signal Corps Publications Agency, Fort Monmouth, New Jersey, ATTN: Standards Branch.

TECHNICAL MANUAL
No. 11-839
TECHNICAL ORDER
No. 31R2-2TRC28-1

DEPARTMENTS OF THE ARMY AND
THE AIR FORCE
WASHINGTON 25, D. C., *14 February 1955*

RADIO TRANSMITTERS T-278/U AND T-416/GR

		Paragraphs	Page
CHAPTER 1.	INTRODUCTION		
Section I.	General	1, 2	3
II.	Description and data	3–10	4
CHAPTER 2.	INSTALLATION		
Section I.	Service upon receipt of equipment	11–15	7
II.	Initial adjustment of equipment	16–18	11
CHAPTER 3.	OPERATION		
Section I.	Controls and instruments	19–22	16
II.	Operation under usual conditions	23–26	20
III.	Operation under unusual conditions	27–30	20
CHAPTER 4.	ORGANIZATIONAL MAINTENANCE		
Section I.	Tools and equipment	31, 32	21
II.	Preventive maintenance services	33–37	21
III.	Lubrication and weatherproofing	38–40	24
IV.	Troubleshooting at organizational maintenance level	41–43	24
CHAPTER 5.	THEORY	44–57	27
CHAPTER 6.	FIELD MAINTENANCE		
Section I.	General troubleshooting techniques	58–60	44
II.	Troubleshooting Radio Transmitters T-278/U and T-416/GR	61–65	45
III.	Repairs	66–70	54
IV.	Final testing	71–76	58
CHAPTER 7.	SHIPMENT AND LIMITED STORAGE AND DEMOLITION TO PREVENT ENEMY USE		
Section I.	Shipment and limited storage	77, 78	61
II.	Demolition of materiel to prevent enemy use	79, 80	61
INDEX		-----	64

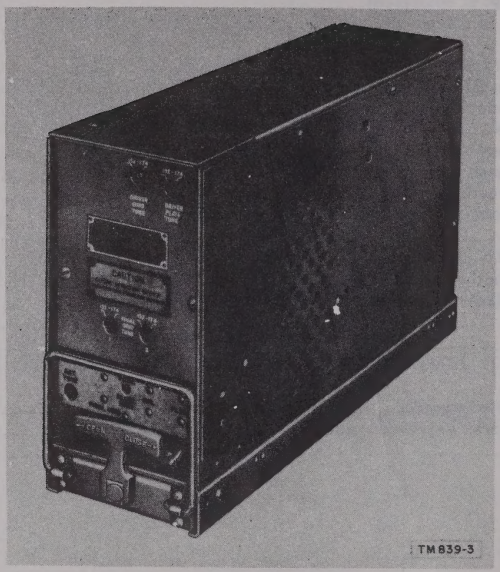

Figure 1. Radio Transmitter T-278/U

CHAPTER 1
INTRODUCTION

Section I. GENERAL

1. Scope

a. This manual contains information for the tuning, maintenance, and repair of Radio Transmitters T–278/U and T–416/GR. The two transmitters are discussed together but specific differences are shown when necessary. The word *transmitter* as used throughout the manual applies to either transmitter.

b. Official nomenclature followed by (*) is used to indicate all models of an equipment. Thus, Electrical Equipment Cabinet CY–938(*)/VRC represents Electrical Equipment Cabinet CY–938/VRC and Electrical Equipment Cabinet CY–938A/VRC; Electrical Equipment Cabinet CY–1221(*)/G represents Electrical Equipment Cabinet CY–1221/G and Electrical Equipment Cabinet CY–1221A/G; Radio Set AN/VRC–19(*) represents Radio Set AN/VRC–19 (24 volts), Radio Set AN/VRC–19X (12 volts), and Radio Set AN/VRC–19Y (6 volts).

c. A list of nomenclature assignments for various components discussed in this manual and the common usage name assigned to each component is given below:

Nomenclature	*Common name*
Radio Transmitter T–278/U and/or Radio Transmitter T–416/GR.	Transmitter.
Electrical Equipment Cabinet CY–938(*)/VRC and/or Electrical Equipment Cabinet CY–1221/(*) G.	Equipment cabinet.
Radio Set Control C–847/U and/or Electrical Equipment Cabinet CY–1221(*)/G (local control panel).	Control unit.
Radio Sets AN/VRC–19(*), AN/FRC–27, AN/TRC–28, or AN/TRC–34.	Radio set.
Power Supply PP–804/U or Dynamotor-Power Supply DY–93/G, DY–98/G, or DY–100/U.	Transmitter power supply.
Radio Receiver R–394/U	Receiver.

2. Forms and Records

The following forms will be used for reporting unsatisfactory conditions of Army equipment and in performing preventive maintenance.

a. DD Form 6, Report of Damaged or Improper Shipment, will be filled out and forwarded as prescribed in SR 745–45–5 (Army); Navy Shipping Guide, Article 1850–4 (Navy); and AFR 71–4 (Air Force).

b. DA Form 468, Unsatisfactory Equipment Report, will be filled out and forwarded to the Office of the Chief Signal Officer as prescribed in SR 700–45–5.

c. DD Form 535, Unsatisfactory Report, will be filled out and forwarded to Commanding General, Air Materiel Command, Wright-Patterson Air Force Base, Dayton, Ohio, as prescribed in SR 700–45–5 and AFR 65–26.

d. DA Form 11–239, Second and Third Echelon Maintenance Check List for Signal Corps Equipment (Radio Communication, Direction Finding, Carrier, Radar), will be prepared in accordance with instructions on the back of the form (fig. 17).

e. Use other forms and records as authorized.

Section II. DESCRIPTION AND DATA

3. Purpose and Use

a. Radio Transmitters T–278/U and T–416/GR are frequency-modulated (fm) transmitters that operate in the frequency range of 152 to 174 megacycles (mc). Both transmitters are used in systems providing two-way communication between two points or for service as radio relay stations. Since the two transmitters depend on other equipment for power and operating controls they must be used as part of a system.

b. Radio Transmitter T–278/U is intended for use in mobile stations. It can be mounted in various types of vehicles, such as cars, trucks, trains, and boats. It has a nominal power output of 25 watts for frequencies between 152 and 162 mc and of 20 watts for frequencies between 162 and 174 mc. Radio Transmitter T–416/GR is meant to be used with fixed station installations. It has a power output of 45 watts on all frequencies between 152 and 174 mc. The power output from Radio Transmitter T–416/GR may be increased to 250 watts with the aid of a radio-frequency (rf) amplifier.

4. System Application

(fig. 2)

a. Radio Transmitter T–278/U. The T–278/U is used as a basic component of Radio Set AN/VRC–19 (*). This set is a vehicular radio set with a power output of approximately 25 watts. It provides simplex communication between two or more vehicles or between vehicles and a central station. (Simplex communication is two-way communication between two parties in which only one party at a time may transmit.) The radio set also may be used as a radio relay station. Radio Transmitter T–278/U is controlled and operated from a control unit on the radio set and depends on another radio set component (the transmitter power supply) for power. For further information on the system application of the transmitter as part of Radio Set AN/VRC–19(*), refer to TM 11–297, Radio Sets AN/VRC–19, –19X, and –19Y.

b. Radio Transmitter T–416/GR. The T–416/GR is used as a basic component of Radio Sets AN/FRC–27, AN/TRC–28, and AN/TRC–34. These radio sets are used in fixed station systems that provide single-channel, simplex communication between stations. These systems are connected with either local or remote control units. The transmitter is controlled and operated from either of these units and is powered by a power supply included in the radio set. Systems using Radio Sets AN/FRC–27 and AN/TRC–34 have a power output of 45 watts. An rf amplifier and its power supply are included with Radio Set AN/TRC–28. In this system, Radio Transmitter T–416/GR is used as an exciter for the rf amplifier which increases the power output to 250 watts. For further information on the system application of the transmitter as part of these radio sets, refer to TM 11–226, Radio Sets AN/FRC–27 and AN/TRC–34 or TM 11–252, Radio Set AN/TRC–28.

5. Technical Characteristics of Radio Transmitters T–278/U and T–416/GR

Frequency range	152 to 174 mc.
Operating channels	Any two channels within the frequency range of 152–174 mc and not separated by more than 1 mc.
Transmitter type	Crystal-controlled fm.
Distance range	Line of sight.
Type of modulation	Fm, derived from phase modulation.
Frequency deviation	15 kc for 100% modulation at 1,000 cycles. Deviation limited to 18 kc for all frequencies.
Type of transmission	Voice.
Crystals:	
Number of crystals	Two
Type	Crystal Unit CR–27/U.
Frequency range	4,750 to 5,437.5 kc.
Multiplication in transmitter.	32 times on all frequencies.
Output impedance	50 ohms into coaxial cable.
Audio input:	
Carbon microphone	100 mv for 100% modulation at 1,000 cycles.
600-ohm line input	200 mv for 100% modulation at 1,000 cycles.
Spurious emission	Attenuated at least 70 db below carrier.
Antenna	¼ wave length vertical.
Weight, unmounted	8¾ lb.
Number of tubes:	
Radio Transmitter T–278/U.	13.
Radio Transmitter T–416/GR.	12.
Power supply:	
Radio Transmitter T–278/U.	External dc operated Dynamotor-Power Supply DY–93/G, DY–98/G, or DY–100/U.
Radio Transmitter T–416/GR.	External ac-operated Power Supply PP–804/U.

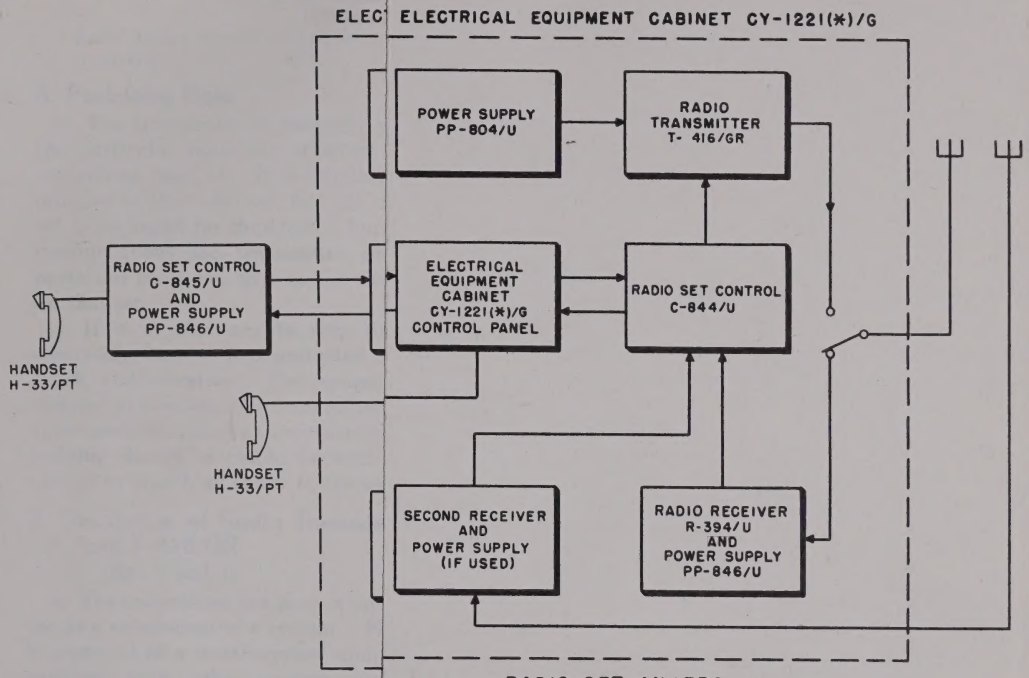
ELECTRICAL EQUIPMENT CABINET CY-1221(*)/G
POWER SUPPLY PP-804/U
RADIO TRANSMITTER T-416/GR
RADIO SET CONTROL C-845/U AND POWER SUPPLY PP-846/U
ELECTRICAL EQUIPMENT CABINET CY-1221(*)/G CONTROL PANEL
RADIO SET CONTROL C-844/U
HANDSET H-33/PT
HANDSET H-33/PT
SECOND RECEIVER AND POWER SUPPLY (IF USED)
RADIO RECEIVER R-394/U AND POWER SUPPLY PP-846/U

RADIO SET AN/FRC-27
OR AN/TRC - 34

3. Purpose and Use

a. Radio Transmitters T–278/U and T–416/GR are frequency-modulated (fm) transmitters that operate in the frequency range of 152 to 174 megacycles (mc). Both transmitters are used in systems providing two-way communication between two points or for service as radio relay stations. Since the two transmitters depend on other equipment for power and operating controls they must be used as part of a system.

b. Radio Transmitter T–278/U is intended for use in mobile stations. It can be mounted in various types of vehicles, such as cars, trucks, trains, and boats. It has a nominal power output of 25 watts for frequencies between 152 and 162 mc and of 20 watts for frequencies between 162 and 174 mc. Radio Transmitter T–416/GR is meant to be used with fixed station installations. It has a power output of 45 watts on all frequencies between 152 and 174 mc. The power output from Radio Transmitter T–416/GR may be increased to 250 watts with the aid of a radio-frequency (rf) amplifier.

4. System Application

(fig. 2)

a. Radio Transmitter T–278/U. The T–278/U is used as a basic component of Radio Set AN/VRC–19 (*). This set is a vehicular radio set with a power output of approximately 25 watts. It provides simplex communication between two or more vehicles or between vehicles and a central station. (Simplex communication is two-way communication between two parties in which only one party at a time may transmit.) The radio set also may be used as a radio relay station. Radio Transmitter T–278/U is controlled and operated from a control unit on the radio set and depends on another radio set component (the transmitter power supply) for power. For further information on the system application of the transmitter as part of Radio Set AN/VRC–19(*), refer to TM 11–297, Radio Sets AN/VRC–19, –19X, and –19Y.

b. Radio Transmitter T–416/GR. The T–416/GR is used as a basic component of Radio Sets AN/FRC–27, AN/TRC–28, and AN/TRC–34. These radio sets are used in fixed station systems that provide single-channel, simplex communication between stations. These systems are connected with either local or remote control units. The transmitter is controlled and operated from either of these units and is powered by a power supply included in the radio set. Systems using Radio Sets AN/FRC–27 and AN/TRC–34 have a power output of 45 watts. An rf amplifier and its power supply are included with Radio Set AN/TRC–28. In this system, Radio Transmitter T–416/GR is used as an exciter for the rf amplifier which increases the power output to 250 watts. For further information on the system application of the transmitter as part of these radio sets, refer to TM 11–226, Radio Sets AN/FRC–27 and AN/TRC–34 or TM 11–252, Radio Set AN/TRC–28.

5. Technical Characteristics of Radio Transmitters T–278/U and T–416/GR

Frequency range	152 to 174 mc.
Operating channels	Any two channels within the frequency range of 152–174 mc and not separated by more than 1 mc.
Transmitter type	Crystal-controlled fm.
Distance range	Line of sight.
Type of modulation	Fm, derived from phase modulation.
Frequency deviation	15 kc for 100% modulation at 1,000 cycles. Deviation limited to 18 kc for all frequencies.
Type of transmission	Voice.
Crystals:	
Number of crystals	Two
Type	Crystal Unit CR–27/U.
Frequency range	4,750 to 5,437.5 kc.
Multiplication in transmitter.	32 times on all frequencies.
Output impedance	50 ohms into coaxial cable.
Audio input:	
Carbon microphone	100 mv for 100% modulation at 1,000 cycles.
600-ohm line input	200 mv for 100% modulation at 1,000 cycles.
Spurious emission	Attenuated at least 70 db below carrier.
Antenna	¼ wave length vertical.
Weight, unmounted	8¾ lb.
Number of tubes:	
Radio Transmitter T–278/U.	13.
Radio Transmitter T–416/GR.	12.
Power supply:	
Radio Transmitter T–278/U.	External dc operated Dynamotor-Power Supply DY–93/G, DY–98/G, or DY–100/U.
Radio Transmitter T–416/GR.	External ac-operated Power Supply PP–804/U.

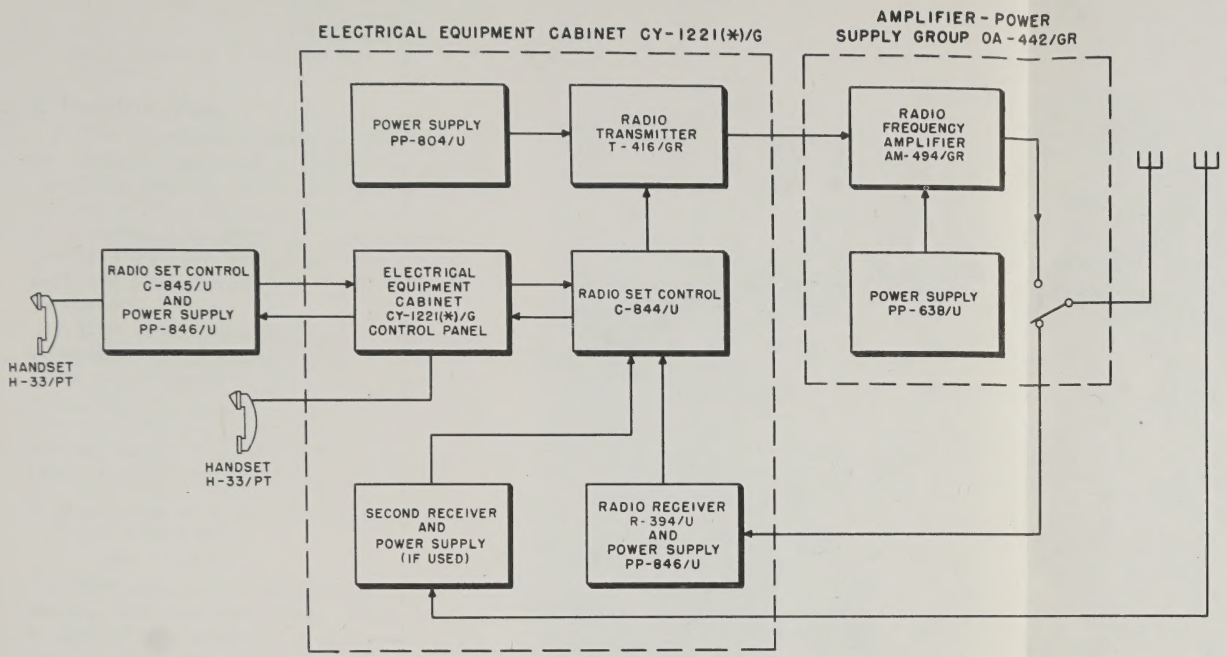
ELECTRICAL EQUIPMENT CABINET CY-1221(*)/G
AMPLIFIER - POWER SUPPLY GROUP OA-442/GR
POWER SUPPLY PP-804/U
RADIO TRANSMITTER T-416/GR
RADIO FREQUENCY AMPLIFIER AM-494/GR
RADIO SET CONTROL C-845/U AND POWER SUPPLY PP-846/U
ELECTRICAL EQUIPMENT CABINET CY-1221(*)/G CONTROL PANEL
RADIO SET CONTROL C-844/U
POWER SUPPLY PP-638/U
HANDSET H-33/PT
HANDSET H-33/PT
SECOND RECEIVER AND POWER SUPPLY (IF USED)
RADIO RECEIVER R-394/U AND POWER SUPPLY PP-846/U
RADIO SET AN/TRC-28

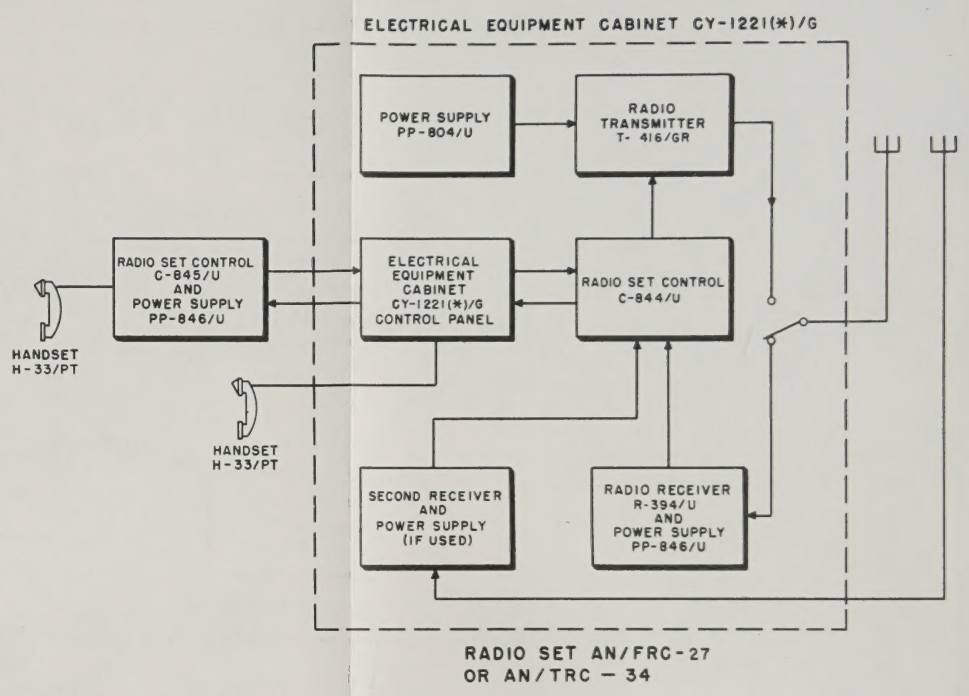
ELECTRICAL EQUIPMENT CABINET CY-1221(*)/G
POWER SUPPLY PP-804/U
RADIO TRANSMITTER T-416/GR
RADIO SET CONTROL C-845/U AND POWER SUPPLY PP-846/U
ELECTRICAL EQUIPMENT CABINET CY-1221(*)/G CONTROL PANEL
RADIO SET CONTROL C-844/U
HANDSET H-33/PT
HANDSET H-33/PT
SECOND RECEIVER AND POWER SUPPLY (IF USED)
RADIO RECEIVER R-394/U AND POWER SUPPLY PP-846/U
RADIO SET AN/FRC-27 OR AN/TRC-34

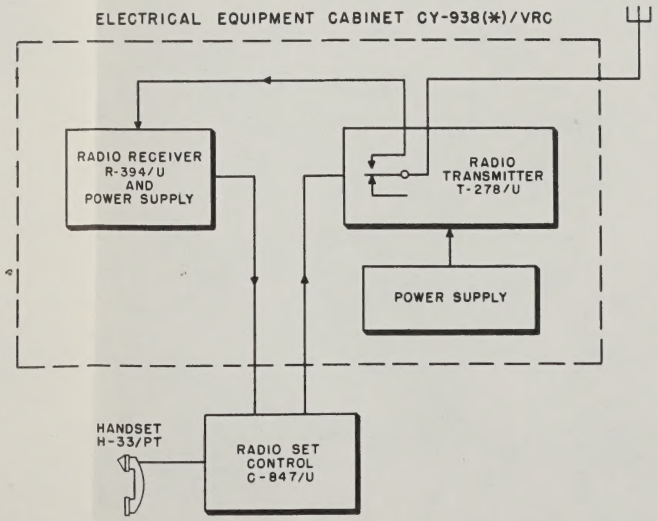

Figure 2. Radio Transmitters T-278/U and T-416/GR, system applications.

Power output:

Radio Transmitter T–278/U.	25 watts for frequencies between 152 and 162 mc. 25 watts for frequencies between 162 and 174 mc.
Radio Transmitter T–416/GR.	45 watts.

6. Packaging Data

a. The transmitter is generally packaged with the particular radio set of which it is a basic component (par. 4). It is installed in its normal position in the radio set, and the complete radio set is packaged for shipment. For specific information about the transmitter packaging in a particular radio set, refer to the technical manual for that set.

b. If it is necessary to ship the transmitter separately, be sure it is protected from moisture, shock, and vibration. The equipment should be inclosed in a waterproof inner carton and a sturdy outer container, such as a wooden crate. Enough padding should be placed between the two containers to absorb all shock to the equipment.

7. Description of Radio Transmitters T–278/U and T–416/GR

(figs. 1 and 3)

a. The transmitter is a plug-in unit intended for use as a component of a system. When in use, it is mounted in a weatherproof equipment cabinet together with other system components. It operates in the frequency range of 152 to 174 mc and depends on other system equipment for power and operating controls.

b. Both sides of the transmitter are covered by removable metal dust covers. Mounted on the front panel are two handles and controls and test points that are used during the alinement of the transmitter. One handle, marked OPEN and CLOSE, controls a lock-in assembly that locks the transmitter firmly in place when it is installed in its normal operating position. The other handle may be used to pull the unit from the equipment cabinet, when necessary. Both fold flat against the front panel when not in use.

c. All connections between the transmitter and other system components are made through a single multicontact connector mounted at the rear of the unit. A bracket with a square opening in the center (fig. 3) is attached in the center of the upper part of the rear panel. The bracket engages with a projecting piece in the equipment cabinet and helps to hold the transmitter firmly in place.

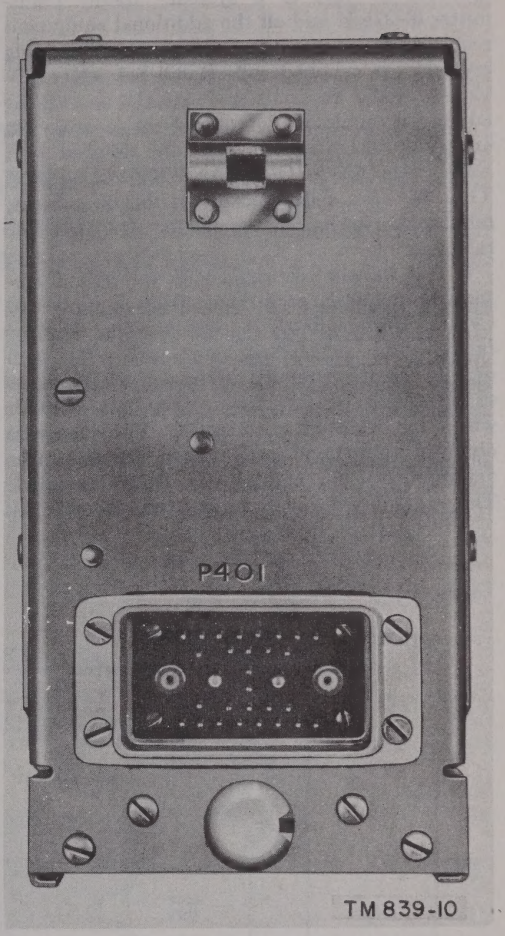

Figure 3. Typical transmitter, rear view.

d. The complete transmitter is 8½ inches high, 4½ inches wide, and 14½ inches deep. It weighs 8¾ pounds.

8. Running Spares

Spare transmitter parts, such as tubes, fuses, pilot lamps, and vibrators, are included in a spare parts kit issued with the particular radio set in which the transmitter is used. For a list of the running spares supplied, refer to the technical manual for the particular radio set.

9. Additional Equipment Required

a. Since the transmitter is dependent on other components for power and control, it must be

operated as part of a system. Radio Transmitter T–278/U and all the additional equipment required to operate it, except the operating crystals, are supplied with Radio Set AN/VRC–19(*). Radio Transmitter T–416/GR and all the additional equipment required to operate it, except the operating crystals, are supplied with Radio Sets AN/FRC–27, AN/TRC–28, or AN/TRC–34. For a detailed list of this equipment, refer to the technical manual for the particular radio set.

b. The transmitter frequencies are crystal controlled; therefore, each transmitter requires two Crystal Units CR–27/U. Because the required fundamental crystal frequency varies for each desired operating frequency, these crystals are not supplied with the transmitter or the radio set with which the transmitter is issued. They may be obtained through normal supply channels after determining the crystal frequency required. The procedure for determining the crystal frequency necessary to produce any desired operating frequency is outlined in paragraph 17*e*.

10. Differences in Models

a. Radio Transmitters T–278/U and T–416/GR look exactly alike except for the location of controls on the front panel (figs. 12 and 13). The purpose and use of each control remains the same.

b. The power output and driver stages are different in each transmitter because of the difference in power outputs. Radio Transmitter T–416/GR uses higher powered driver and output circuits to obtain a 45-watt output. For a detailed description of circuit changes, refer to paragraphs 48*e* and 49.

c. The component reference symbols used in the driver and power output circuits of Radio Transmitter T–416/GR are numbered in the 500 series.

d. The two transmitters cannot be interchanged between their respective radio sets. Each transmitter must be used only with the radio sets with which it is issued (par. 9).

CHAPTER 2
INSTALLATION

Section I. SERVICE UPON RECEIPT OF EQUIPMENT

11. Siting

The transmitter must be installed in the equipment cabinet of the radio set in which it is used. The proper method of choosing a location for the radio set is discussed in the technical manual for the particular set.

12. Uncrating, Unpacking, and Checking New Equipment

a. Remove all the packing material from the case containing the equipment cabinet and remove the cabinet from the case.

b. Release the latches that hold the front cover on the equipment cabinet and remove the cover.

c. To remove the transmitter from the equipment cabinet, turn the lock-in assembly handle completely counterclockwise and pull the transmitter forward.

d. Inspect the pins on the plug, located on the rear panel of the transmitter (fig. 3), to be sure that none have been bent or damaged in shipment.

e. Remove the right and left side dust covers from the transmitter by releasing the six Dzus-type fastenings on each side. Check for damaged

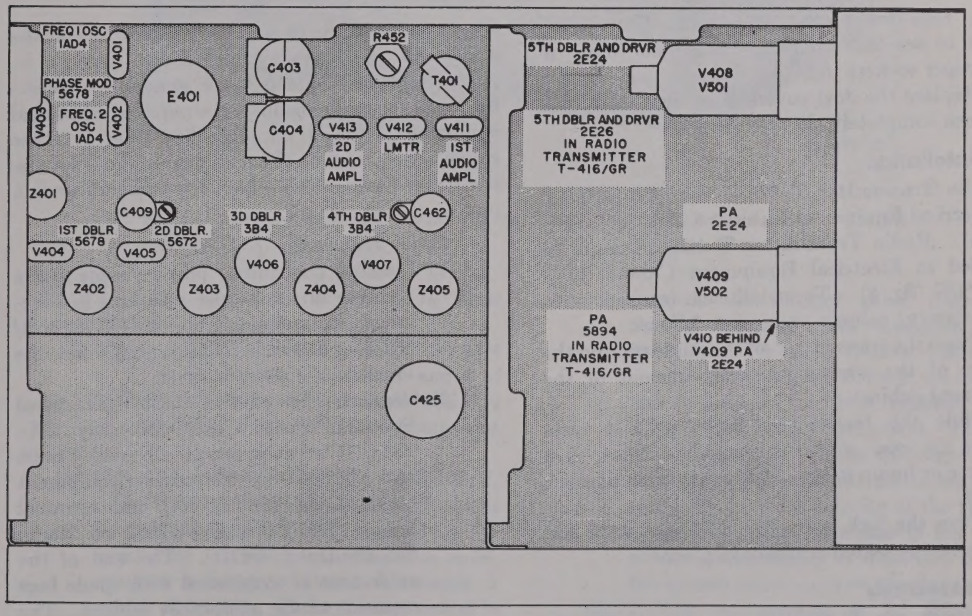

NOTE:
REFERENCE NUMBERS OF 500 SERIES ARE LOCATED IN RADIO TRANSMITTER T-416/GR

TM 839-33

Figure 4. Radio Transmitters T-278/U and T-416/GR, tube locations.

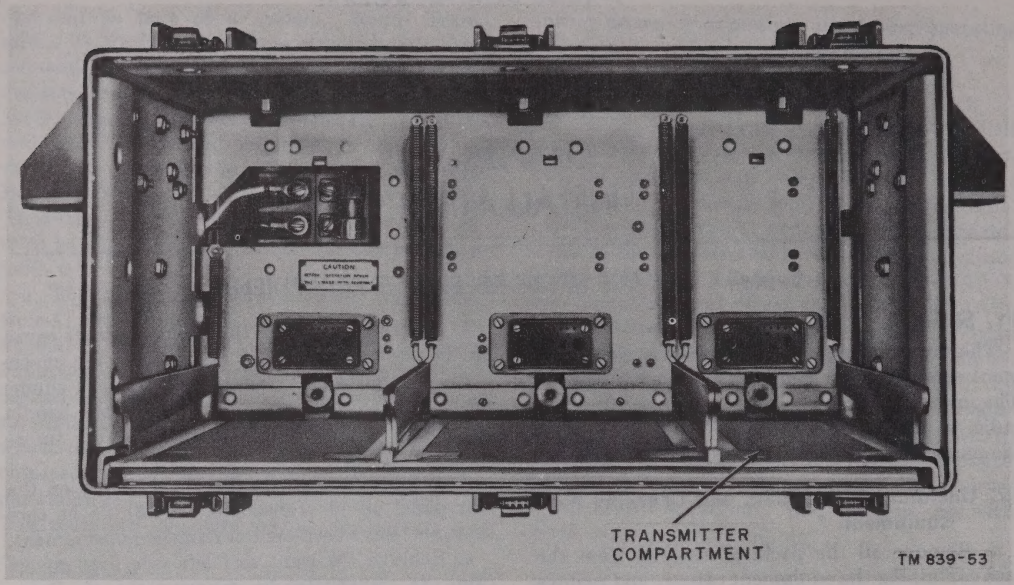

Figure 5. Electrical Equipment Cabinet CY–938/VRC, housing for Radio Transmitter T–278/U.

tubes, resistors, broken leads, and bent parts. Check to see that all tubes are seated firmly in the proper sockets (fig. 4).

f. Replace the dust covers after the transmitter has been completely checked.

13. Installation

Radio Transmitter T–278/U is to be installed in Electrical Equipment Cabinet CY–938(*)/VRC (fig. 5). Radio Transmitter T–416/GR must be installed in Electrical Equipment Cabinet CY–1221(*)/G (fig. 6). To install each transmitter in its equipment cabinet proceed as follows:

a. Place the transmitter on the guide rails on the bottom of the transmitter compartment of the equipment cabinet.

b. Slide the transmitter back until it rests against the rear of the equipment cabinet. Do not force or bump it against the rear of equipment cabinet.

c. Turn the lock-in handle clockwise until the transmitter is seated securely in place.

14. Connections

Installing the transmitter in the equipment cabinet automatically engages the plug at the back of the transmitter to the jack in the rear of the equipment cabinet. This makes all the necessary connections between the transmitter and the additional equipment required to operate it. Subparagraphs *a* and *b* below generally describe the methods used to connect the required additional equipment. For a detailed discussion of these connections, refer to the technical manual for the particular radio set of which the transmitter is a part.

a. Radio Transmitter T–278/U (fig. 7).

(1) Install a transmitter power supply and a receiver in the proper positions in Electrical Equipment Cabinet CY–938(*)/VRC. Refer to TM 11–297 for the location of these positions.

(2) Connect the control cable (Electrical Special Purpose Cable Assembly CX–2341/U) between terminal boards TB804 and TB805 on Electrical Equipment Cabinet CY–938(*)/VRC and terminal boards TB1501 and TB1502 on Radio Set Control C–847/U. The end of the cable that is terminated with spade lugs connects to the equipment cabinet. The end terminated in pin connectors connects to the control unit. Each wire is marked with a numbered metal tag that matches a number on one of the terminal

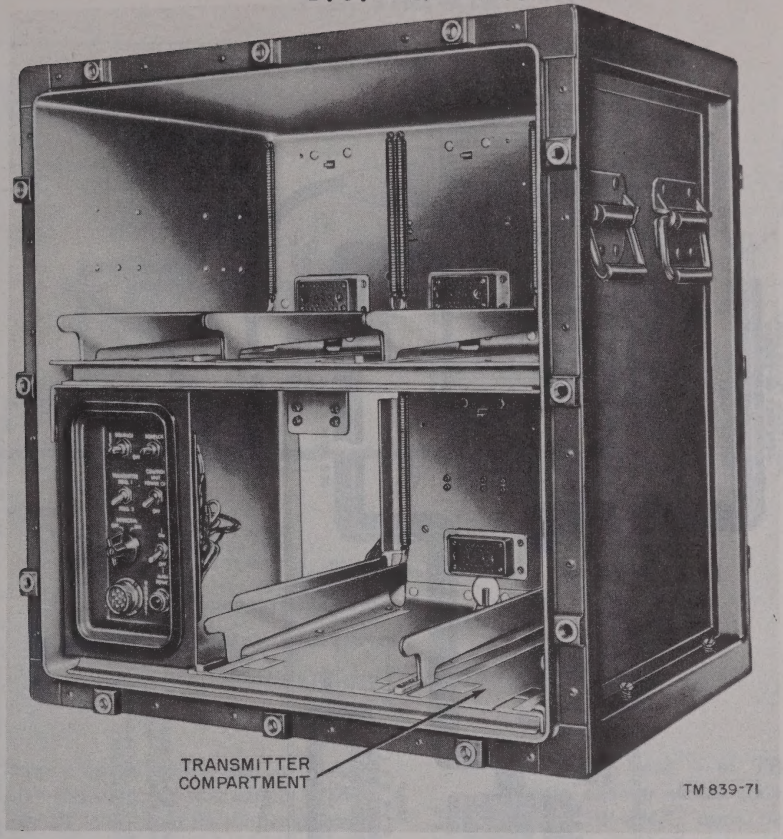

Figure 6. Electrical Equipment Cabinet CY–1221/G, housing for Radio Transmitter T–416/GR.

boards. Connect the wires to their matching terminals.

(3) Place a jumper between terminals 3 and 4 of TB801, between terminals 5 and 6 of TB802, and between terminals 8 and 9 of TB802 at the rear of the equipment cabinet.

(4) Dynamotor-Power Supplies DY–100/U, DY–93/G, and DY–98/G are 6-, 12-, and 24-volt transmitter power supplies, respectively. If the 6-volt model is used, connect a jumper between terminals 1 and 2 of TB803. If the 12-volt model is used, connect a jumper between terminals 3 and 4 of TB802. If the 24-volt model is used, connect a jumper between terminals 2 and 3 of TB803.

(5) Connect the battery cable (Electrical Special Purpose Cable Assembly CX-2342/U or Electrical Power Cable Assembly CX–2343/U) between the battery and terminals 1 and 2 of terminal board TB806 on the equipment cabinet. The lead that will go the the ungrounded side of the battery must be connected to terminal 1. If the polarity of the voltage at the B+ output terminals of the transmitter power supply is negative, reverse the output connectors on the dynamotor.

(6) Connect an antenna or Rf Wattmeter AN/URM–43 to J804 on the equipment cabinet.

(7) Connect Handset H–33/PT to the HANDSET connector on the control unit.

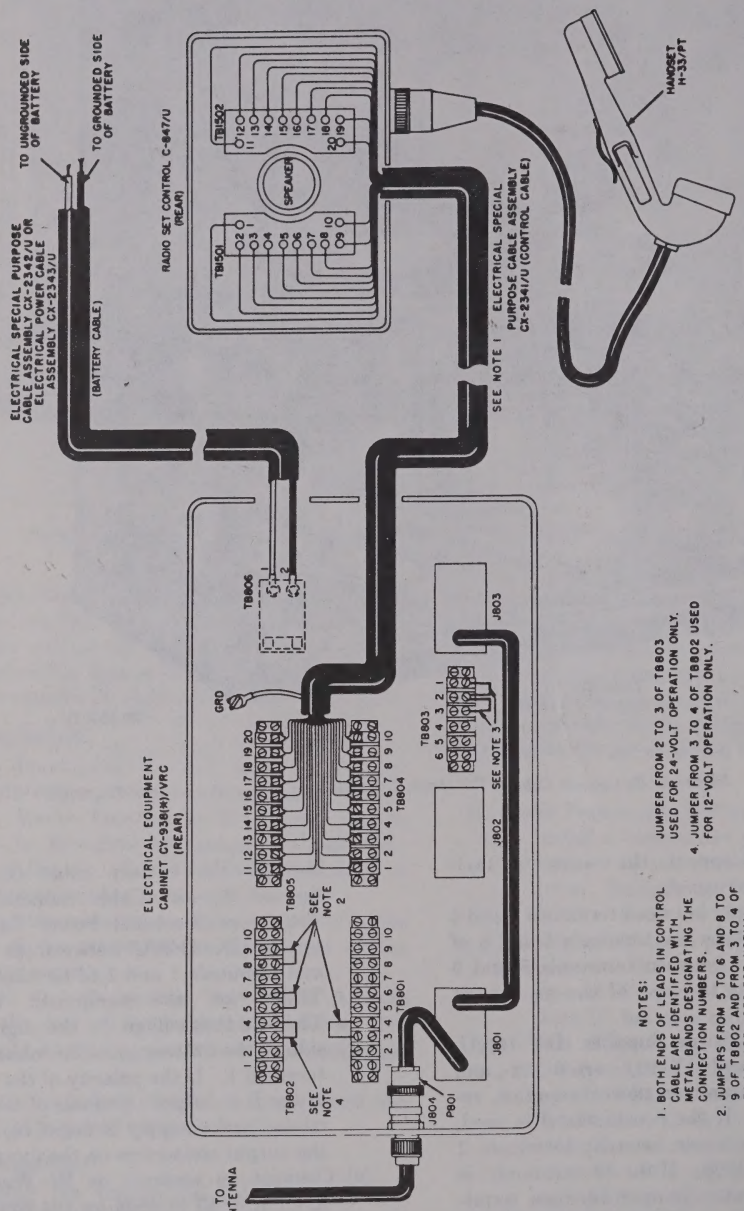
ELECTRICAL SPECIAL PURPOSE CABLE ASSEMBLY CX-2342/U OR ELECTRICAL POWER CABLE ASSEMBLY CX-2343/U
TO UNGROUNDED SIDE OF BATTERY
TO GROUNDED SIDE OF BATTERY
(BATTERY CABLE)
RADIO SET CONTROL C-647/U (REAR)
TB1502
SPEAKER
TB1501
HANDSET H-33/PT
SEE NOTE 1
ELECTRICAL SPECIAL PURPOSE CABLE ASSEMBLY CX-2341/U (CONTROL CABLE)
ELECTRICAL EQUIPMENT CABINET CY-938(R)/VRC (REAR)
TB805
GRD
TB803
J803
J802
SEE NOTE 3
TB804
TB802
SEE NOTE 4
SEE NOTE 2
TB801
J801
J804
P801
TO ANTENNA
NOTES:
1. BOTH ENDS OF LEADS IN CONTROL CABLE ARE IDENTIFIED WITH METAL BANDS DESIGNATING THE CONNECTION NUMBERS.
2. JUMPERS FROM 5 TO 6 AND 8 TO 9 OF TB802 AND FROM 3 TO 4 OF TB801 ARE USED FOR NORMAL OPERATION.
3. JUMPER FROM 1 TO 2 OF TB803 USED FOR 6-VOLT OPERATION ONLY.
JUMPER FROM 2 TO 3 OF TB803 USED FOR 24-VOLT OPERATION ONLY.
4. JUMPER FROM 3 TO 4 OF TB802 USED FOR 12-VOLT OPERATION ONLY.
TM 839-69

Figure 7. Connections for operating Radio Transmitter T-278/U

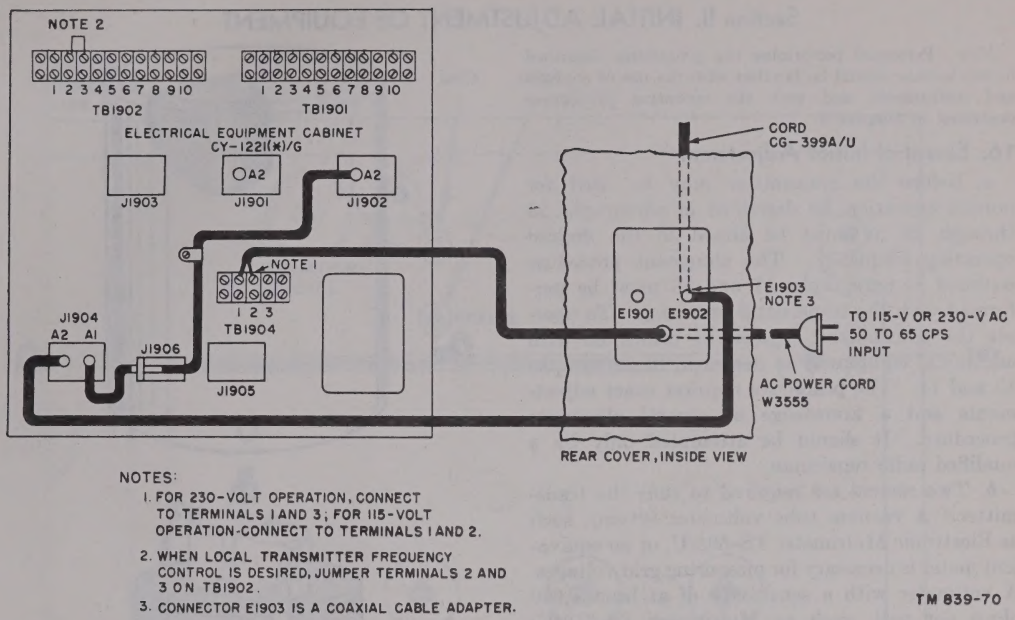

Figure 8. Connections for operating Radio Transmitter T–416/GR.

b. Radio Transmitter T–416/GR (fig. 8).

(1) Install a transmitter power supply (Power Supply PP–804/U) in its proper position in Electrical Equipment Cabinet CY–1221(*)/G.

(2) Install Radio Receiver R–394/U in the Receiver No. 1 position in the equipment cabinet. Refer to TM 11–226 or TM 11–252 for the location of the correct component positions.

(3) Connect a jumper between terminals 2 and 3 of terminal board TB1902 on the equipment cabinet.

(4) Connect the coaxial cable from A 2 of jack J1902 to jack J1906.

(5) Connect the coaxial cable from terminal A 2 of jack J1904 to terminal E1902 on the inside of the rear cover of the equipment cabinet. Use Adapter UG–201/U (E1903) to make the connection.

(6) If the equipment is to be operated from a 230-volt ac source, connect the power cable to terminals 1 and 3 of TB1904. If the equipment is to be operated from a 115-volt ac source, connect the cable to terminals 1 and 2 of TB1904. The voltage selector switch (S601) in Power Supply PP–804/U must be set in the correct position according to the power source used.

(7) Connect Handset H–33/PT to the connector marked HANDSET on the control unit.

(8) Connect an antenna or RF Wattmeter AN/URM–43 to outside connector E1902.

15. Service Upon Receipt of Used or Reconditioned Equipment

a. Follow the instructions in paragraph 12 for uncrating, unpacking, and checking the equipment.

b. Check the used or reconditioned equipment for tags or other indications pertaining to changes in wiring of the equipment. If any changes have been made, note the changes in this manual, preferably on the schematic diagrams (figs. 48 and 49).

c. Install the equipment by following the procedure outlined in paragraph 13.

Section II. INITIAL ADJUSTMENT OF EQUIPMENT

Note. Personnel performing the procedures described in this section should be familiar with the use of controls and instruments and with the operating procedures described in chapter 3.

16. Extent of Initial Adjustment

a. Before the transmitter may be used for normal operation, as described in paragraphs 23 through 26, it must be alined to the desired operating frequency. The alinement procedure outlined in paragraphs 17 and 18 must be performed with the transmitter operating. To operate the transmitter, it must be connected with additional equipment as described in paragraphs 13 and 14. The procedure requires exact adjustments and a knowledge of general alinement procedure. It should be attempted only by a qualified radio repairman.

b. Two meters are required to tune the transmitter. A vacuum tube voltmeter (vtvm), such as Electronic Multimeter TS–505/U, or an equivalent meter is necessary for measuring grid voltages. A voltmeter with a sensitivity of at least 1,000 ohms per volt, such as Multimeter TS–352/U, is needed for measuring the voltage drops across various resistors.

c. Most of the component reference symbols are identical for both transmitters. In some cases, however, the reference symbols for Radio Transmitter T–416/GR differ from those for Radio Transmitter T–278/U. In these cases, two reference symbols are given for each component; one is in parentheses. The one in parentheses applies to Radio Transmitter T–416/GR.

17. Preliminary Transmitter Adjustment

a. Remove the transmitter from the equipment cabinet (par. 12*c*).

b. Remove the right and left side dust covers from the transmitter.

c. Connect a patch cord (par. 32) between the connector at the rear of the transmitter and the jack at the rear of the transmitter compartment of the equipment cabinet.

d. Select an operating frequency and an alternate operating frequency that are not separated by more than 1 mc.

e. Determine the correct crystal frequency for each desired operating frequency by means of the following formula:

Crystal frequency in kc

$$= \frac{\text{desired operating frequency in kc}}{32}$$

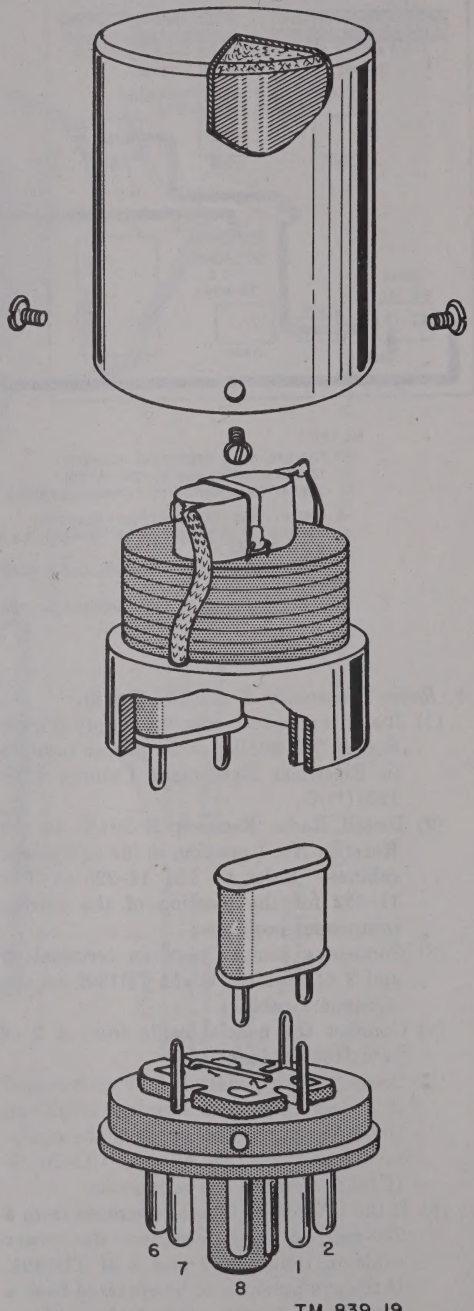

Figure 9. Transmitter crystal oven, exploded view.

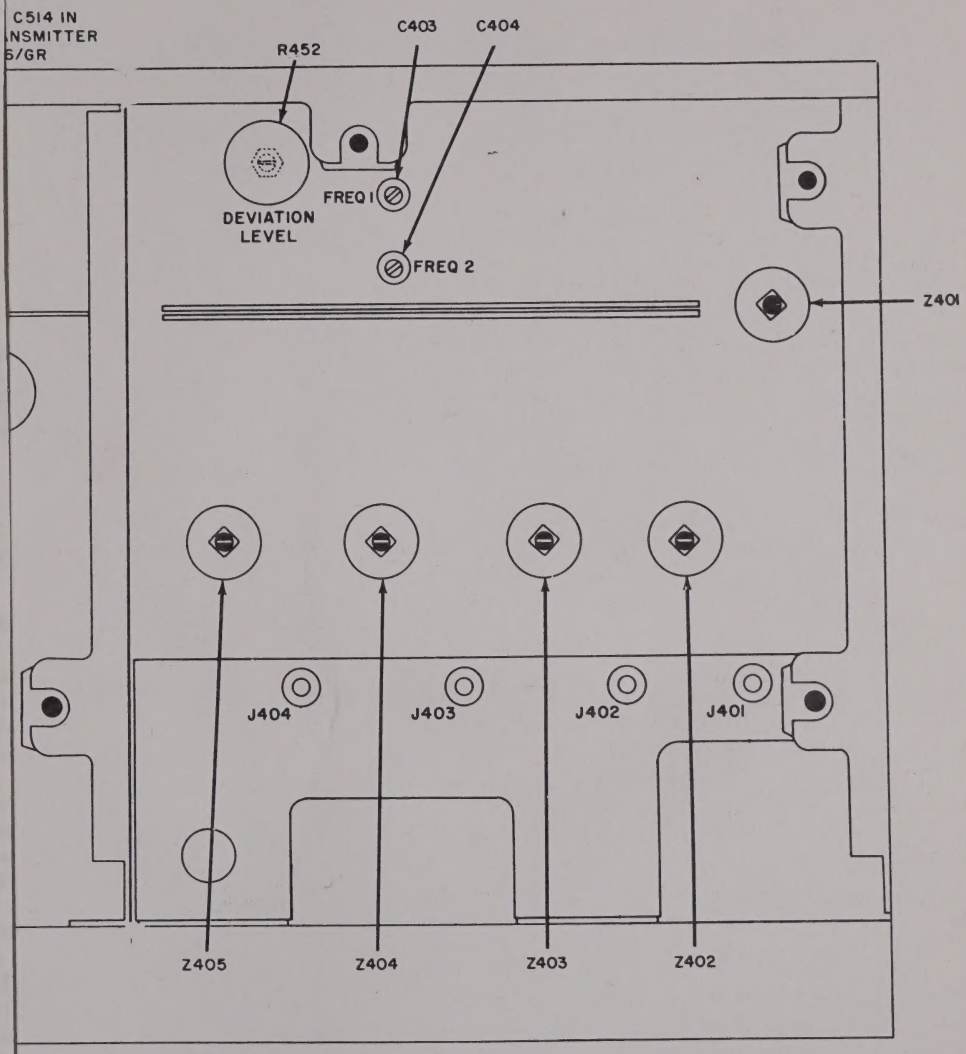

DIO TRANSMITTER T-278/U OR T-416/GR, RIGHT SIDE

TM 839-18

Section II. INITIAL ADJUSTMENT OF EQUIPMENT

Note. Personnel performing the procedures described in this section should be familiar with the use of controls and instruments and with the operating procedures described in chapter 3.

16. Extent of Initial Adjustment

a. Before the transmitter may be used for normal operation, as described in paragraphs 23 through 26, it must be alined to the desired operating frequency. The alinement procedure outlined in paragraphs 17 and 18 must be performed with the transmitter operating. To operate the transmitter, it must be connected with additional equipment as described in paragraphs 13 and 14. The procedure requires exact adjustments and a knowledge of general alinement procedure. It should be attempted only by a qualified radio repairman.

b. Two meters are required to tune the transmitter. A vacuum tube voltmeter (vtvm), such as Electronic Multimeter TS–505/U, or an equivalent meter is necessary for measuring grid voltages. A voltmeter with a sensitivity of at least 1,000 ohms per volt, such as Multimeter TS–352/U, is needed for measuring the voltage drops across various resistors.

c. Most of the component reference symbols are identical for both transmitters. In some cases, however, the reference symbols for Radio Transmitter T–416/GR differ from those for Radio Transmitter T–278/U. In these cases, two reference symbols are given for each component; one is in parentheses. The one in parentheses applies to Radio Transmitter T–416/GR.

17. Preliminary Transmitter Adjustment

a. Remove the transmitter from the equipment cabinet (par. 12*c*).

b. Remove the right and left side dust covers from the transmitter.

c. Connect a patch cord (par. 32) between the connector at the rear of the transmitter and the jack at the rear of the transmitter compartment of the equipment cabinet.

d. Select an operating frequency and an alternate operating frequency that are not separated by more than 1 mc.

e. Determine the correct crystal frequency for each desired operating frequency by means of the following formula:

Crystal frequency in kc

$$= \frac{\text{desired operating frequency in kc}}{32}$$

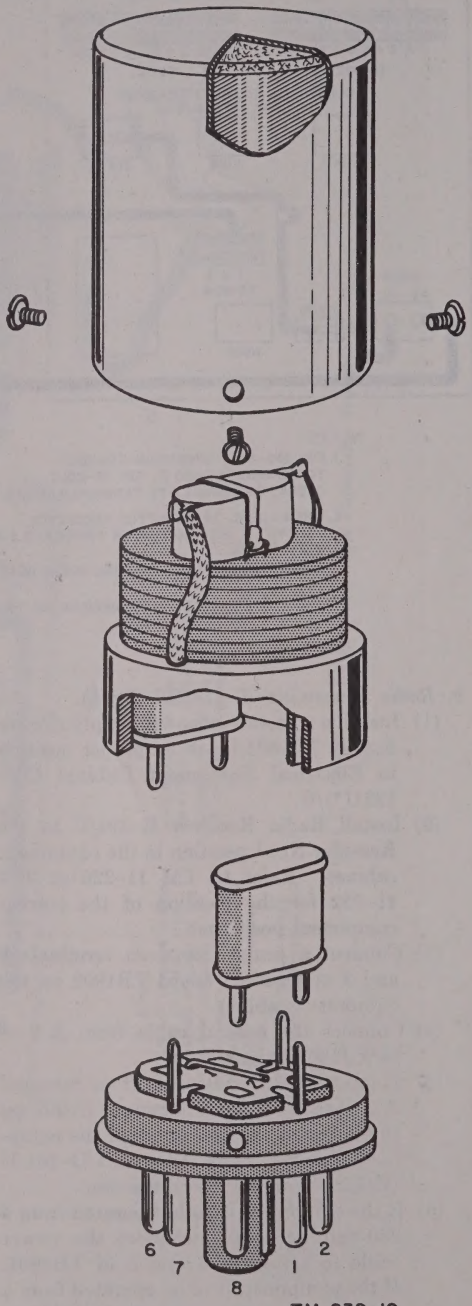

Figure 9. Transmitter crystal oven, exploded view.

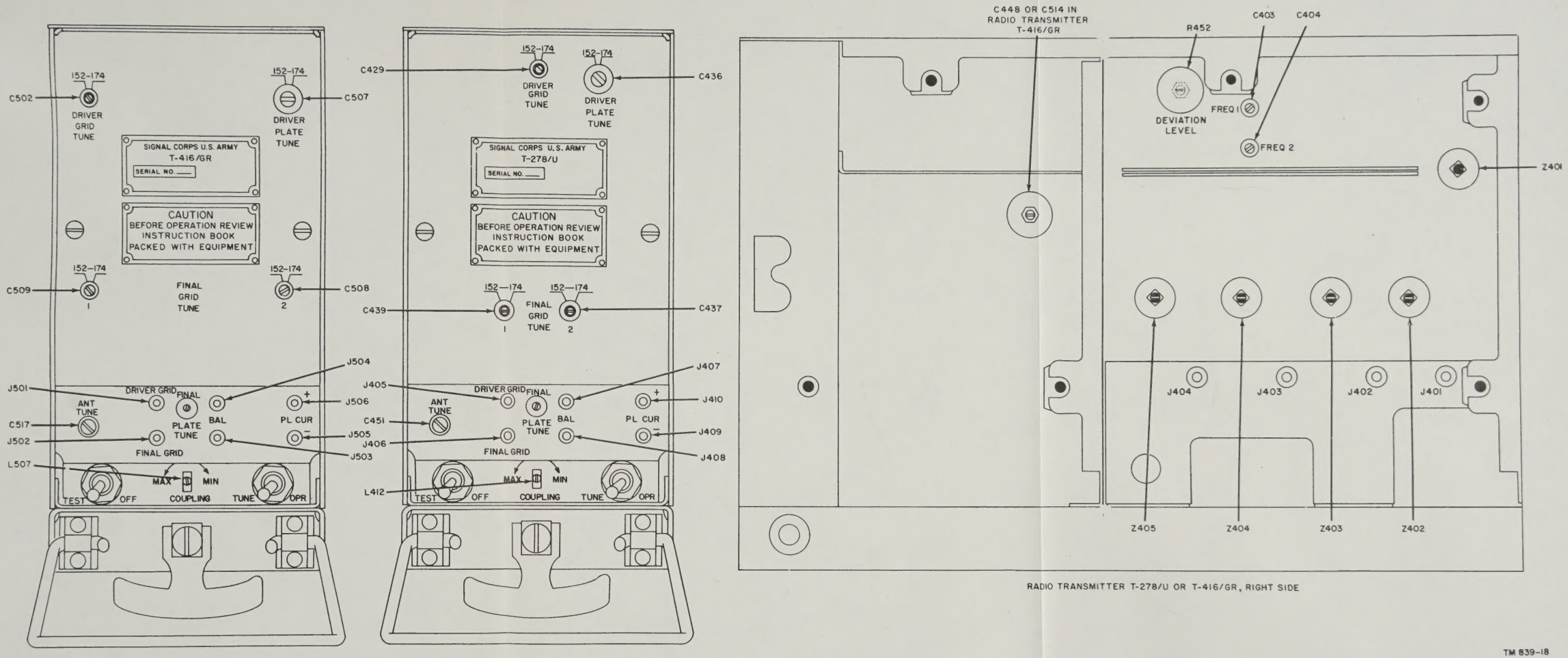

RADIO TRANSMITTER T-278/U OR T-416/GR, RIGHT SIDE

TM 839-18

Figure 10. Radio Transmitters T-278/U and T-416/GR, test and alinement points and tuning controls.

328754 O - 55 (Face p. 13)

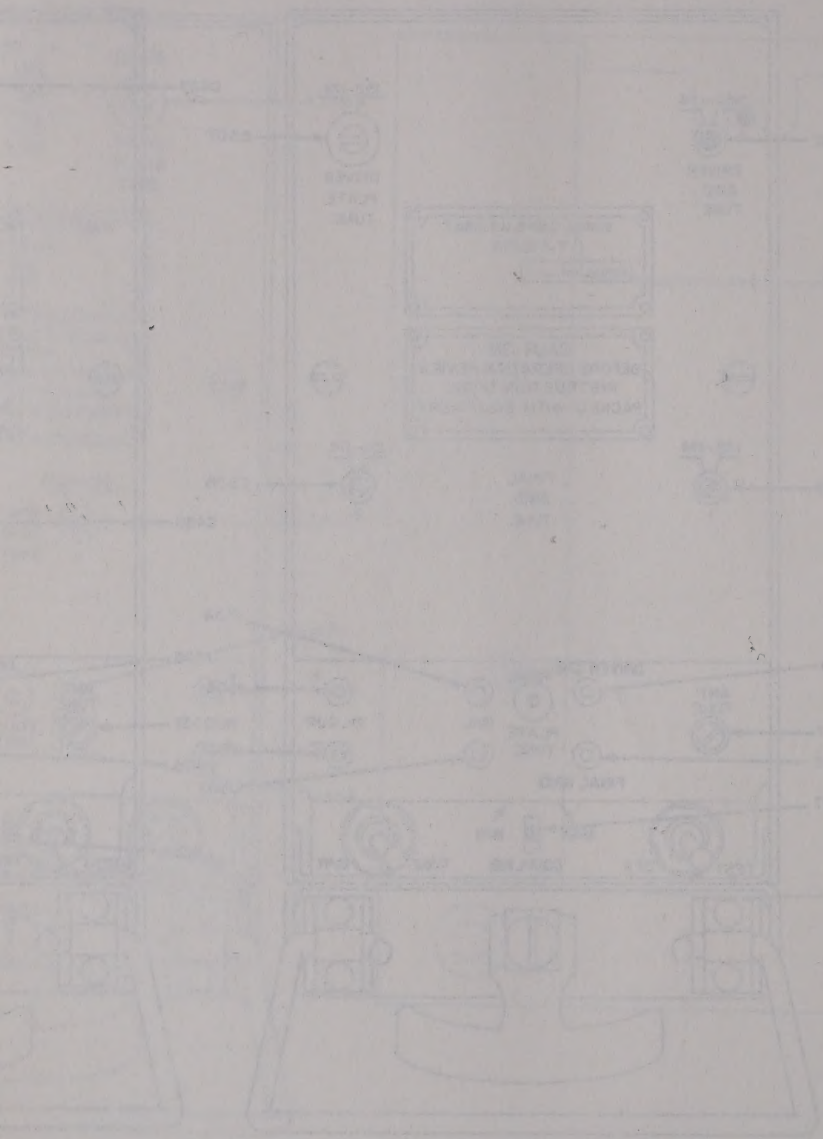

An example of the use of this formula, with a desired operating frequency of 161 mc and an alternate operating frequency of 162 mc, is given below:

F_1 represents the first desired operating frequency of 161 mc.

F_c represents the crystal frequency that must be found. Then, according to the above formula,

$$F_c = \frac{F_1}{32}$$

or,

$$F_c = \frac{161{,}000}{32} \text{ kc} = 5{,}031.250 \text{ kc}$$

F_2 represents the second, or alternate, operating frequency of 162 mc. The second crystal frequency may then be found by following the same procedure.

$$F_c = \frac{F_2}{32}$$

or,

$$F_c = \frac{162{,}000}{32} \text{ kc} = 5{,}062.500 \text{ kc}$$

To obtain accuracy of the operating frequency, carry the division out to three places to the right of the decimal point. The above example uses the maximum allowable frequency difference between the two operating frequencies (1 mc). Actually, the transmitter operates more efficiently when the two frequencies chosen are closer together. When the crystal frequencies have been determined, Crystal Units CR-27/U may be ordered through normal supply channels.

f. Unplug the entire crystal oven assembly, E401 (fig. 9).

g. Remove the three screws that secure the cover of the crystal oven to the socket.

h. Unplug the heater and thermostat element from the socket.

i. Insert the crystals in the socket base. Plug the crystal for the desired operating frequency into the section marked 1. The crystal will then function when the frequency switch on the control unit is in the frequency 1 position. Plug the crystal for the alternate operating frequency into the section marked 2. This crystal will then function when the frequency switch is in the frequency 2 position.

j. Reassemble the crystal oven and insert it into the transmitter.

k. Set the FREQ 1 and FREQ 2 capacitors (C403 and C404) on the transmitter chassis (fig. 10) to their mechanical midpoint.

l. Apply power to the heating element of the crystal oven. (For Radio Transmitter T-278/U, turn the VOLUME-OFF switch on Radio Set Control C-847/U in a clockwise direction. For Radio Transmitter T-416/GR, place the MAIN POWER switch on the control panel of Electrical Equipment Cabinet CY-1221(*)/G in the ON position.) To attain a stable crystal temperature, allow at least 15 minutes' heating time before proceeding with paragraph 18.

m. Turn the frequency selector switch on the control unit to position 1.

n. Turn the COUPLING control on the transmitter to the MIN position.

o. Place the TUNE-OPR switch in the TUNE position.

18. Tuning Radio Transmitters T-278/U and T-416/GR

Refer to figure 10 for the location of all test points and tuning controls used in the following procedure:

a. Final plate tune capacitor C448 (C514) is located directly above the power-amplifier tubes. Loosen the locknut and turn the capacitor to the extreme clockwise position. Back off the number of counterclockwise turns for the operating frequency as indicated on the chart below. The plate tank circuit of the power amplifier then will be approximately tuned to the operating frequency.

Operating frequency (mc)	Capacitor setting (in counter-clockwise turns)	Operating frequency (mc)	Capacitor setting (in counter-clockwise turns)
152-158	1	166-170	3
158-162	1½	170-174	10
162-166	2		

b. Place the TEST-OFF switch in the TEST position to apply power to the transmitter.

c. Connect the common lead of the vtvm to the transmitter chassis. Set the meter to read negative dc voltage.

d. Insert the test probe into each jack indicated in the *test point* column of the chart below. Using the vtvm for voltage indications, make each corresponding adjustment as outlined in the *adjust-*

ment column. The normal voltage readings that may be expected at the completion of each adjustment are listed in the *normal voltage* column.

Test point	Normal voltage (dc volts)	Adjustments
J401	−5	Adjust Z401 for a maximum voltage. Note this voltage and detune Z401 by turning it in a clockwise direction until the meter indicates a voltage that is nine-tenths of the maximum noted above.
J402	−22	Adjust Z402 for maximum negative voltage.
J403	−28	Adjust Z403 for maximum negative voltage.
J404	−70	Adjust Z404 for maximum negative voltage.
DRIVER GRID jack J405 (J501).	−55	Set the tuning slug of Z405 at approximately the same physical position as the tuning slugs of Z401, Z402, Z403, and Z404. Adjust the DRIVER GRID TUNE control C429 (C502) for maximum negative voltage. Adjust Z405 for maximum negative voltage. There may be interaction between Z405 and C429 (C502), and repeated readjustment of the two may be necessary to obtain the maximum negative voltage.

e. Turn FINAL GRID TUNE 1 control (capacitor C439 (C509)) and FINAL GRID TUNE 2 control (capacitor C437 (C508)) so that the shaft slots are parallel and pointing at the 152 mark on the front panel.

f. Remove the front panel by releasing the fastener on each side of the caution plate.

g. Inspect the two capacitors. The plates should be slightly unmeshed to the right (in a clockwise direction). If either or both of the capacitors are unmeshed to the left (in a counterclockwise direction), rotate the capacitor shaft 180° so that the opposite end of the shaft slot is pointing at the 152 mark. Refer to figure 11 for the correct capacitor position.

h. Replace the front panel and insert the test probe in FINAL GRID jack J406 (J501).

i. Keeping the shaft slots parallel by alternately adjusting one and then the other in small clockwise movements, adjust FINAL GRID TUNE 1 and FINAL GRID TUNE 2 controls for maximum negative voltage. Adjust DRIVER PLATE TUNE control (capacitor C436 (C507)) for maximum negative voltage. The normal voltage after completion of these adjustments is −57 volts dc.

j. Place the TEST-OFF switch in the OFF position.

k. Connect the voltmeter (1,000 ohms per volt or better) across PL CUR test jacks J409 (J505) and J410 (J506); be sure to observe proper polarity. Set the voltmeter selector switch to read approximately 2.5 volts dc. The meter will read 1 volt for every 100 ma of plate current.

Caution: If a voltmeter with a metal case is used to measure across the PL CUR jacks, be sure to insulate the case from the transmitter chassis (ground). Both jacks are at a high positive potential. *Do not touch the voltmeter while making measurements.*

l. Set the FINAL PLATE TUNE control at the center of its turning range.

m. Place the TEST-OFF switch in the TEST position.

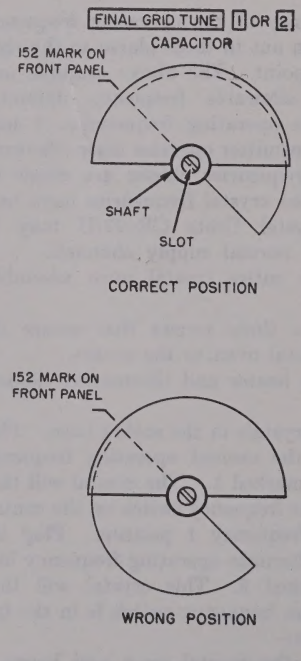

Figure 11. FINAL GRID TUNE adjustment, capacitor starting position.

n. Adjust final plate tune capacitor C448 (C514) for minimum indication on the voltmeter.

o. Place the TEST-OFF switch in the OFF position and tighten the lock nut on capacitor C448 (C514).

p. Place the TEST-OFF switch in the TEST position.

q. Adjust the FINAL PLATE TUNE control for minimum indication on the voltmeter.

r. Adjust the ANT TUNE control (capacitor C451 (C517)) for maximum voltmeter indication. If no voltage rise is noted, increase the COUPLING control by turning toward MAX and repeat adjustment of the ANT TUNE control.

s. Turn the TUNE-OPR switch to OPR and observe the voltmeter reading. Adjust the COUPLING control toward MAX until 100 ma of plate current is indicated (1 volt dc on meter). For Radio Transmitter T–416/GR, the COUPLING control should be adjusted for 180–200 ma.

t. Readjust the FINAL PLATE TUNE control for minimum indication on the voltmeter.

u. Readjust the ANT TUNE control for a maximum indication on the voltmeter.

v. Repeat steps outlined in *t* and *u* above to satisfy both conditions. Do not change either the FINAL PLATE TUNE or ANT TUNE controls after completing this adjustment.

w. Increase the COUPLING control toward MAX until the voltmeter indicates 1.5 volts dc which corresponds to 150 ma. For Radio Transmitter T–416/GR, increase the COUPLING control until 200 ma are indicated (2 volts).

x. Place the TEST-OFF switch in the OFF position.

y. Disconnect the voltmeter from the PL CUR jacks and connect it across BAL jacks J407 (J503) and J408 (J504).

z. Place the TEST-OFF switch in the TEST position. If plate current of the power amplifier tubes is balanced, the voltmeter across the BAL jacks will read zero. If a deflection is noted, turn FINAL GRID TUNE 1 control in a direction to reduce the deflection. Leave the voltmeter connected to the BAL jacks. Insert the test probe of the vtvm in the FINAL GRID jack and turn FINAL GRID TUNE 2 control in the opposite direction to bring the grid circuit back to resonance, as indicated by maximum negative voltage indication on the vtvm. Repeat the adjustment of FINAL GRID TUNE 1 control to obtain a balance.

aa. Place the TEST-OFF switch in the OFF position and connect the voltmeter test leads to the PL CUR jacks.

ab. Place the TEST-OFF switch in the TEST position and observe the voltmeter indication. If necessary, readjust the COUPLING control to obtain a reading of 1.5 volts. This is proportional to 150 ma of plate current and represents the proper loading for Radio Transmitter T–278/U. Obtain a reading of 2 volts (200 ma) for Radio Transmitter T–416/GR. The transmitter is now completely tuned.

ac. Place the TEST-OFF switch in the OFF position.

ad. Disconnect the meters, reassemble the dust covers, and install the transmitter in the equipment cabinet.

CHAPTER 3
OPERATION

Section I. CONTROLS AND INSTRUMENTS

Note. This section locates, illustrates, and describes the use of the various controls and instruments that are provided for the proper operation of the equipment.

19. General

Haphazard operation or improper settings of the controls can cause damage to electronic equipment. For this reason, it is important to know the function of every control. The actual operation of the transmitter is discussed in paragraphs 23 through 26. The adjustment of the tuning controls on the transmitter is discussed in paragraphs 17 and 18.

20. Radio Transmitters T–278/U and T–416/GR Controls

(fig. 12 and 13)

The following chart lists the transmitter controls and indicates their functions. Where two reference symbols are shown in the control column, the one in parentheses refers to Radio Transmitter T–416/GR.

Control	Function
TEST-OFF switch S402 (S501)	In the TEST position, energizes a relay in an external power supply to provide power for the transmitter.
	In the OFF position, power is not applied to the transmitter until the push-to-talk switch of Handset H–33/PT is pressed.
TUNE-OPR switch S401 (S502)	In the TUNE position, reduces the power output of the transmitter. Used for tuning purposes.
	In the OPR position, allows normal power output.
DRIVER GRID TUNE control C429 (C502).	Tunes the fifth doubler and driver grid tank circuit.
DRIVER PLATE TUNE control C436 (C507).	Tunes the fifth doubler and driver plate tank circuit.
FINAL GRID TUNE 1 control C439 (C509).	Tunes one-half of the grid tank circuit of the power amplifier.
FINAL GRID TUNE 2 control C437 (C508).	Tunes one-half of the grid tank circuit of the power amplifier.
FINAL PLATE TUNE control	Tuning control for the power-amplifier plate tank circuit.
COUPLING control L412 (L507)	Varies the coupling between the plate lines and the output circuits from minimum coupling at the MIN end of the range to maximum coupling at the MAX end.
ANT TUNE control C451 (C517)	Antenna loading adjustment.
DRIVER GRID jack J405 (J501)	Test point for checking grid voltage of the fifth doubler and driver stage.
FINAL GRID jack J406 (J502)	Test point for checking grid voltage of the power-amplifier stage.
BAL jacks J406 and J408 (J503 and J504).	Test points for checking to see that the plate currents of the two halves of the power-amplifier stage are balanced properly.
PL CUR jacks J409 and J410 (J505 and J506).	Test points for checking plate current of the power-amplifier stage.
DEVIATION LEVEL control R452 (not accessible from front panel).	Controls amount of deviation for a given audio input signal.
FREQ 1 capacitor C403 (not accessible from front panel).	Fine tuning adjustment for frequency 1 oscillator.
FREQ 2 capacitor C404 (not accessible from front panel).	Fine tuning adjustment for frequency 2 oscillator.

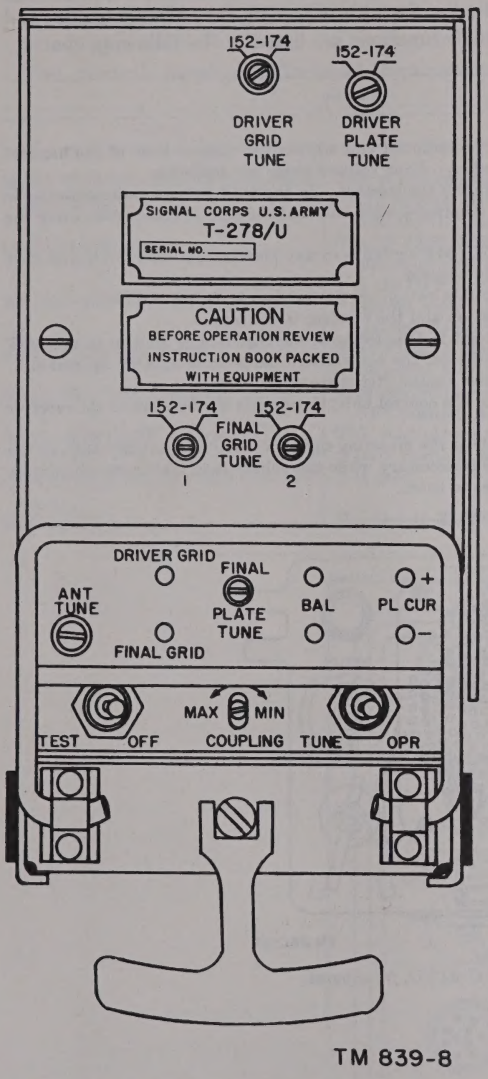

Figure 12. Radio Transmitter T-278/U, front panel.

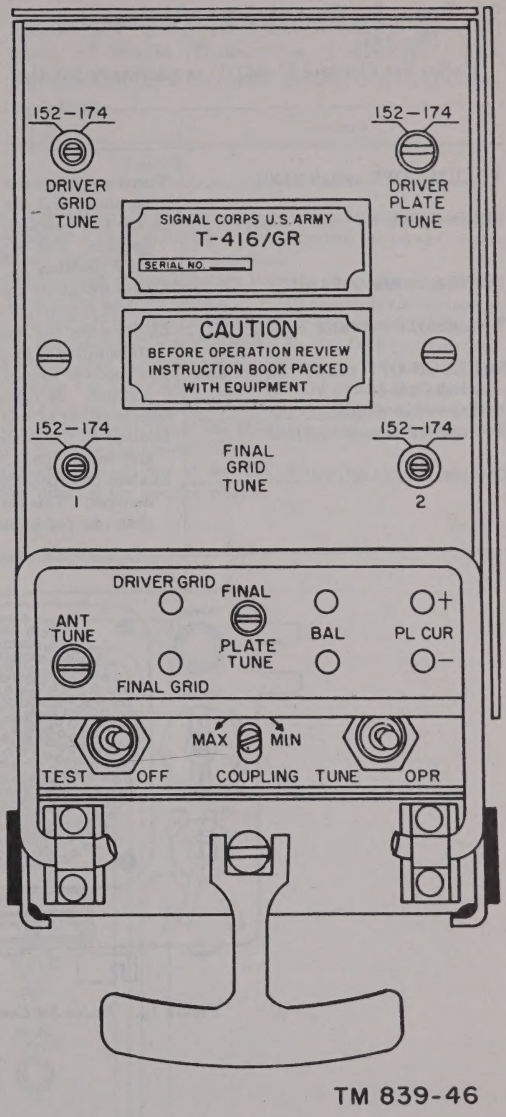

Figure 13. Radio Transmitter T-416/GR, front panel.

21. Radio Set Control C-847/U Controls

(fig. 14)

Radio Set Control C-847/U is necessary for the operation of Radio Transmitter T-278/U with Radio Set AN/VRC-19(*). The controls and their functions are listed in the following chart.

Control	Function
VOLUME-OFF switch S1501	Turns on the power to the radio set and adjusts the volume level of the handset earphone and the speaker. Four volume levels are available.
SPKR ON-OFF switch S1502	In the ON position, connects the speaker. In the OFF position, disconnects the speaker. The switch is spring-loaded and must be held in place when using the OFF position.
POWER indicator I 1501	Lights whenever the VOLUME switch is in any position but OFF; indicates that power is applied to the receiver.
TRANSMIT indicator I 1502	Lights when the push-to-talk switch on the handset is closed, indicating that the transmitter is in operation and the receiver is disabled.
SQUELCH-OFF control R1509 and switch S1504.	The receiver squelch circuit is disabled with the SQUELCH control in the OFF position. In other positions, the control sets the level of squelch operation.
FREQ switch S1503	Selects either of two preset transmitter frequencies.
HANDSET connector J1501	Located on the bottom of the control unit; it connects the handset to the receiver and transmitter.
Speaker	Enables the operator to hear the incoming signals without continually holding the handset. This feature is necessary while the vehicle is in motion or when more than one person desires to listen.

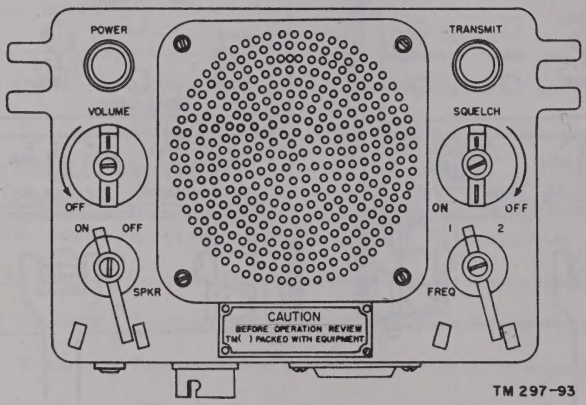

Figure 14. Radio Set Control C-847/U, front panel.

22. Control Panel of Electrical Equipment Cabinet CY–1221(*)/G

(fig. 15)

The control panel of Electrical Equipment Cabinet CY–1221(*)/G is used to control the operation of Radio Transmitter T–416/GR. The controls and their functions are listed in the following chart:

Control	Function
MAIN POWER ON-OFF switch and pilot lamp.	This switch controls the power from the ac source to the transmitter power supply and receiver power supplies. The pilot lamp is lighted when the power switch is in the ON position and Receiver No. 1 is installed.
INTERCOM. switch	The INTERCOM. switch controls communication between the radio set and the remote control unit (Radio Set Control C–845/U). The switch is spring-loaded in the OFF position. In the ON position, it is possible to communicate with the remote unit; however, the transmitter is disabled. In the OFF position, the transmitter operates when either handset switch is closed.
TRANSMITTER switch	Selects transmitter frequency 1 in the FREQ 1 position and selects the alternate frequency in the FREQ 2 position, when the equipment is set for local operation.
REC 1 SQUELCH control	This control sets the threshold sensitivity of the REC 1 squelch circuit. In the OFF position, a switch disables the squelch circuit.
REC 2 SQUELCH control	This control sets the threshold sensitivity of the REC 2 squelch circuit. In the OFF position, a switch disables the squelch circuit.
CONTROL UNIT POWER ON-OFF switch.	Not used.
HANDSET jack	Handset H–33/PT connects to this jack.

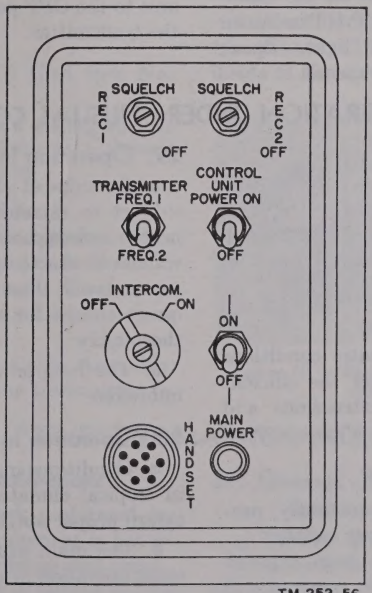

Figure 15. Electrical Equipment Cabinet CY–1221(*)/G, control panel.

Section II. OPERATION UNDER USUAL CONDITIONS

23. Preliminary Starting Procedure

a. Place the TEST-OFF switch on the transmitter in the OFF position.

b. Place the TUNE-OPR switch on the transmitter in the OPR position.

c. Turn the VOLUME-OFF switch on Radio Set Control C–847/U in a clockwise direction toward the VOLUME position to apply power to the crystal oven heater of Radio Transmitter T–278/U. For the T–416/GR, place the MAIN POWER switch on the control unit in the ON position.

d. Turn the frequency selector switch on the control unit to either position 1 or 2, depending on which operating frequency has been selected. Filament power then will be applied to the correct oscillator tube of the transmitter.

24. Starting Procedure

Note. If, during the starting procedure, an abnormal result is obtained, refer to the equipment performance check list (par. 43).

a. Press the push-to-talk switch on the handset. For the T–278/U, the TRANSMIT indicator lamp on the control unit should light. Speak into the handset microphone to transmit.

b. Release the push-to-talk switch to turn off the transmitter.

25. Frequency Changing

Either of two preset operating frequencies is available when operating the transmitter. To change from one operating frequency to the other, turn the frequency selector switch on the control unit to the other position. This may be done at any time during the operation of the transmitter. The change from one crystal to the other will not cause any serious detuning since both crystals are within 1 mc of each other and therefore do not differ greatly in frequency.

26. Stopping Procedure

a. Release the push-to-talk switch of Handset H–33/PT. This removes all power from the transmitter, the crystal oven voltage and the filament voltage in the T–416/GR.

b. Turn the VOLUME-OFF switch (MAIN POWER switch for T–416/GR) on the control unit to the OFF position to remove all power from the transmitter.

Section III. OPERATION UNDER UNUSUAL CONDITIONS

27. General

The operation of the transmitter may be difficult in regions where it is extremely cold, hot, humid, moist, or sandy. In paragraphs 28 through 30, instructions are given for minimizing the effect of unusual operating conditions.

28. Operation in Arctic Climates

Subzero temperatures and climatic conditions associated with cold weather affect the efficient operation of the equipment. Instructions and precautions for operation under such adverse conditions follow:

a. Handle the equipment carefully.

b. Keep tube filaments lighted constantly, provided this does not overtax the power supply.

c. When equipment, which has been exposed to the cold, is brought into a warm room, it will start to sweat and will continue to do so until it reaches room temperature. This condition also arises when the equipment warms up during the day after exposure during a cold night. Dry it thoroughly. Remove any coating of frost that may form.

29. Operation in Tropical Climates

a. In tropical climates, the equipment will be subject to extreme moisture. High relative humidity causes moisture to form on the equipment whenever the temperature of the equipment becomes lower than the air around it. Make frequent checks for moisture. Dry the equipment thoroughly.

b. The fungiproofing on all items must remain unbroken.

30. Operation in Desert Climates

a. Conditions in desert areas are similar to those in tropical climates. Use the same measures to insure proper operation of the equipment.

b. The main problem which arises with equipment operation in desert areas is the large amount of sand, or dust and dirt which may enter the moving parts of the transmitter controls. Make frequent preventive maintenance checks. Keep all dust covers tight and all cable entrance holes sealed to keep out dust.

CHAPTER 4
ORGANIZATIONAL MAINTENANCE

Section I. TOOLS AND EQUIPMENT

31. Tools and Materials

The tools and materials listed below are necessary for the maintenance of the transmitter. Most of the tools are included in Tool Equipment TE–41. Items contained in Tool Equipment TE–41 are listed in Department of the Army Supply Manual SIG 6–TE–41.

Screwdrivers .
Wrenches
Pliers
Point file or relay burnishing tool
Clean cloth
No. 0000 sandpaper
Crocus cloth
Solvent, Dry Cleaning (SD) (Fed spec No. P–S–661a)

Note. Gasoline will not be used as a cleaning fluid for any purpose. Solvent (SD) is available as a cleaning fluid through established supply channels.

32. Special Tools and Materials

a. An alinement tool suitable for high-frequency (hf) adjustments is supplied with the radio set in which the transmitter is issued. Emergency alinement tools should contain as little metal as possible.

b. Electrical Special Purpose Cable Assembly CX–2371/U is used to connect the transmitter to the equipment cabinet when it is necessary to operate it outside of the equipment cabinet. The cable, known as a patch cord, is 4 feet long and has a male connector on one end and a female connector on the other end (fig. 16). It is necessary when making internal adjustments and measurements under operating conditions. It is not issued with the equipment but must be ordered through normal supply channels. Authorization to issue this test cable is contained in SB 11-170, Test Cable for Maintenance of Non-tactical Series Radio Sets.

c. A set of Allen wrenches is issued with each transmitter. These wrenches are attached to the inside of the right-hand dust cover.

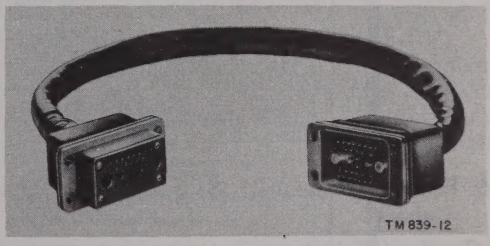

Figure 16. Electrical Special Purpose Cable Assembly CX–2371/U (patch cord).

Section II. PREVENTIVE MAINTENANCE SERVICES

33. Definition of Preventive Maintenance

Preventive maintenance is work performed on equipment (usually when the equipment is not in use) to keep it in good working order so that breakdowns and needless interruptions in service will be kept to a minimum. Preventive maintenance differs from troubleshooting and repair since its object is to prevent certain troubles from occurring.

34. General Preventive Maintenance Techniques

a. Use No. 0000 sandpaper to remove corrosion.

b. Use a clean, dry, lint-free cloth or a dry brush for cleaning.

(1) If necessary, except for electrical contacts, moisten the cloth or brush with solvent (SD); wipe the parts dry with a cloth.

(2) Clean electrical contacts with a cloth moistened with carbon tetrachloride; then w ipe hem dry with a dry cloth.

Caution: Repeated contact of carbon tetrachloride with the skin or prolonged breathing of the fumes is dangerous. Make sure adequate ventilation is provided.

c. If available, dry compressed air may be used at a line pressure not exceeding 60 pounds per square inch to remove dust from inaccessible places; be careful, however, or mechanical damage from the air blast may result.

d. For further information on preventive maintenance techniques, refer to TB SIG 178, Preventive Maintenance Guide for Radio Communication Equipment.

35. Use of Preventive Maintenance Form (fig. 17)

a. The decision as to which items on DA Form 11–239 are applicable to this equipment is a tactical decision to be made in the case of first echelon maintenance by the communication officer/chief or his designated representative, and in the case of second and third echelon maintenance, by the individual making the inspection. Instructions for the use of the form appear on the reverse side of the form.

b. Circled items in figure 17 are partially or totally applicable to the transmitting equipment. References in the ITEM block refer to paragraphs in the text which contain additional maintenance information.

36. Performing Exterior Preventive Maintenance

Caution: Tighten screws, bolts, and nuts carefully. Fittings tightened beyond the pressure for which they are designed may be damaged or broken.

a. Check for completeness of equipment: dust covers, handles, screws and fasteners.

b. Remove dirt and moisture from all jacks and controls on the front panel and plug P401 (P501) on the back of the transmitter.

c. Inspect all switches and jacks on the front panel for looseness.

d. Check for normal operation. If abnormal results occur at any point in the operating procedure, refer to the equipment performance check list (par. 43).

e. Clean and tighten the transmitter case.

f. Inspect metal surfaces for corrosion and moisture.

37. Performing Interior Preventive Maintenance

Caution: Disconnect all power before performing the following operations. Upon completion, reconnect the power and check the transmitter for satisfactory operation (par. 43).

a. Inspect the seating of plug-in capacitor C425 (fig. 38) and the crystal oven unit. Check tightness of coaxial connectors at the antenna relay.

b. Inspect the FINAL PLATE TUNE control machine bolt (fig. 37) for binding, scraping, excessive looseness, damaged thread, and misalinement. Do the same for the COUPLING control. Check for firm contact of the shorting bar contact to the plate line tubing.

c. Inspect electron tubes for loose envelopes, loose cap connectors, cracked sockets, and insufficient socket spring tension; clean all parts carefully; check the emission of receiver-type tubes (fig. 4 and par. 67).

d. Inspect all fixed capacitors for leaks, bulges, and discoloration.

e. Inspect the antenna relay in the transmitter for loose mounting, corroded contacts, misalinement of contacts, and insufficient spring tension.

f. Inspect the variable capacitors for dirt, moisture, misalinement of plates, and loose mountings.

g. Inspect resistors and insulators for cracks, chipping, blistering, discoloration, and moisture.

h. Clean and tighten switches, antenna relay mount, and interior components.

i. Clean and tighten connections and mounting of power-amplifier plate-line tubing. Check mounting of transformer T401 and potentiometer R452 (fig. 38).

j. Check moistureproofing and fungiproofing to see that it is unbroken.

k. If the deficiencies noted are not corrected during inspection, indicate the action taken on DA Form 11–239.

SECOND AND THIRD ECHELON MAINTENANCE CHECK LIST FOR SIGNAL CORPS EQUIPMENT
RADIO COMMUNICATION, DIRECTION FINDING, CARRIER, RADAR

INSTRUCTIONS: See other side

EQUIPMENT NOMENCLATURE | EQUIPMENT SERIAL NO.

LEGEND FOR MARKING CONDITIONS: ✓ Satisfactory; X Adjustment, repair or replacement required; (X) Defect corrected.
NOTE: Strike out items not applicable.

NO	ITEM	COND	NO.	ITEM	COND
1	COMPLETENESS AND GENERAL CONDITION OF EQUIPMENT (*receiver, transmitter, carrying cases, wire and cable, microphones, tubes, spare parts, technical manuals and accessories*). PAR. 36a		19	ELECTRON TUBES - INSPECT FOR LOOSE ENVELOPES, CAP CONNECTORS, CRACKED SOCKETS: INSUFFICIENT SOCKET SPRING TENSION; CLEAN DUST AND DIRT CAREFULLY; CHECK EMISSION OF RECEIVER TYPE TUBES. PAR. 37c	
2	LOCATION AND INSTALLATION SUITABLE FOR NORMAL OPERATION.		20	INSPECT FILM CUT-OUTS FOR LOOSE PARTS, DIRT, MISALIGNMENT AND CORROSION.	
3	CLEAN DIRT AND MOISTURE FROM ANTENNA, MICROPHONE, HEADSETS, CHESTSETS, KEYS, JACKS, PLUGS, TELEPHONES, CARRYING BAGS, COMPONENT PANELS. PAR. 36b		21	INSPECT FIXED CAPACITORS FOR LEAKS, BULGES, AND DISCOLORATION. PAR. 37d	
4	INSPECT SEATING OF READILY ACCESSIBLE "PLUCK-OUT" ITEMS: TUBES, LAMPS, CRYSTALS, FUSES, CONNECTORS, VIBRATORS, PLUG-IN COILS AND RESISTORS. PAR. 37a		22	INSPECT RELAY AND CIRCUIT BREAKER ASSEMBLIES FOR LOOSE MOUNTINGS; BURNED, PITTED, CORRODED CONTACTS; MISALIGNMENT OF CONTACTS AND SPRINGS; INSUFFICIENT SPRING TENSION; BINDING OF PLUNGERS AND HINGE PARTS. PAR. 37e	
5	INSPECT CONTROLS FOR BINDING, SCRAPING, EXCESSIVE LOOSENESS, WORN OR CHIPPED GEARS, MISALIGNMENT, POSITIVE ACTION. PAR. 36c AND PAR. 37b		23	INSPECT VARIABLE CAPACITORS FOR DIRT, MOISTURE, MISALIGNMENT OF PLATES, AND LOOSE MOUNTINGS. PAR. 37f	
6	CHECK FOR NORMAL OPERATION. PAR. 36d		24	INSPECT RESISTORS, BUSHINGS, AND INSULATORS, FOR CRACKS, CHIPPING, BLISTERING, DISCOLORATION AND MOISTURE. PAR. 37g	
7	CLEAN AND TIGHTEN EXTERIOR OF COMPONENTS AND CASES, RACK MOUNTS, SHOCK MOUNTS, ANTENNA MOUNTS, COAXIAL TRANSMISSION LINES, WAVE GUIDES, AND CABLE CONNECTIONS. PAR. 36e		25	INSPECT TERMINALS OF LARGE FIXED CAPACITORS AND RESISTORS FOR CORROSION, DIRT AND LOOSE CONTACTS.	
8	INSPECT CASES, MOUNTINGS, ANTENNAS, TOWERS, AND EXPOSED METAL SURFACES, FOR RUST, CORROSION, AND MOISTURE. PAR. 36f		26	CLEAN AND TIGHTEN SWITCHES, TERMINAL BLOCKS, BLOWERS, RELAY CASES, AND INTERIORS OF CHASSIS AND CABINETS NOT READILY ACCESSIBLE. PAR. 37h	
9	INSPECT CORD, CABLE, WIRE, AND SHOCK MOUNTS FOR CUTS, BREAKS, FRAYING, DETERIORATION, KINKS, AND STRAIN.		27	INSPECT TERMINAL BLOCKS FOR LOOSE CONNECTIONS, CRACKS AND BREAKS.	
10	INSPECT ANTENNA FOR ECCENTRICITIES, CORROSION, LOOSE FIT, DAMAGED INSULATORS AND REFLECTORS.		28	CHECK SETTINGS OF ADJUSTABLE RELAYS.	
11	INSPECT CANVAS ITEMS, LEATHER, AND CABLING FOR MILDEW, TEARS, AND FRAYING.		29	LUBRICATE EQUIPMENT IN ACCORDANCE WITH APPLICABLE DEPARTMENT OF THE ARMY LUBRICATION ORDER.	
12	INSPECT FOR LOOSENESS OF ACCESSIBLE ITEMS: SWITCHES, KNOBS, JACKS, CONNECTORS, ELECTRICAL TRANSFORMERS, POWERSTATS, RELAYS, SELSYNS, MOTORS, BLOWERS, CAPACITORS, GENERATORS, AND PILOT LIGHT ASSEMBLIES. PAR. 37h		30	INSPECT GENERATORS, AMPLIDYNES, DYNAMOTORS, FOR BRUSH WEAR, SPRING TENSION, ARCING, AND FITTING OF COMMUTATOR.	
13	INSPECT STORAGE BATTERIES FOR DIRT, LOOSE TERMINALS, ELECTROLYTE LEVEL AND SPECIFIC GRAVITY, AND DAMAGED CASES.		31	CLEAN AND TIGHTEN CONNECTIONS AND MOUNTINGS FOR TRANSFORMERS, CHOKES, POTENTIOMETERS, AND RHEOSTATS. PAR. 37i	
14	CLEAN AIR FILTERS, BRASS NAME PLATES, DIAL AND METER WINDOWS, JEWEL ASSEMBLIES.		32	INSPECT TRANSFORMERS, CHOKES, POTENTIOMETERS, AND RHEOSTATS FOR OVERHEATING AND OIL-LEAKAGE.	
15	INSPECT METERS FOR DAMAGED GLASS AND CASES.		33	BEFORE SHIPPING OR STORING - REMOVE BATTERIES.	
16	INSPECT SHELTERS AND COVERS FOR ADEQUACY OF WEATHERPROOFING.		34	INSPECT CATHODE RAY TUBES FOR BURNT SCREEN SPOTS.	
17	CHECK ANTENNA GUY WIRES FOR LOOSENESS AND PROPER TENSION.		35	INSPECT BATTERIES FOR SHORTS AND DEAD CELLS.	
18	CHECK TERMINAL BOX COVERS FOR CRACKS, LEAKS, DAMAGED GASKETS, DIRT AND GREASE.		36	INSPECT FOR LEAKING WATERPROOF GASKETS, WORN OR LOOSE PARTS.	
			37	MOISTURE AND FUNGIPROOF. PAR. 37j	
38	IF DEFICIENCIES NOTED ARE NOT CORRECTED DURING INSPECTION, INDICATE ACTION TAKEN FOR CORRECTION.				

DA FORM 1 MAY 51 11-239 REPLACES DA AGO FORM 419, 1 DEC 50, WHICH IS OBSOLETE. 16-64282-1

TM 839-50

Figure 17. DA Form 11-239.

Section III. LUBRICATION AND WEATHERPROOFING

38. Lubrication

The transmitter requires lubrication only on the threaded shaft of the FINAL PLATE TUNE control and the COUPLING control. The thread of these shafts should be cleaned with solvent (SD), every 3 months; use a lint-free cloth dampened with solvent. The thread then should be coated lightly with Grease, Aircraft and Instrument (GL) (spec MIL–G–3278). Do not allow electrical contacts to become greasy.

39. Weatherproofing Procedures and Precautions

a. General. Signal Corps equipment, when operated under severe climatic conditions, such as prevail in tropical, arctic, and desert regions, requires special treatment and maintenance. Fungus growth, insects, dust, corrosion, salt spray, excessive moisture, and extreme temperatures are harmful to most materials. Some of the problems encountered are—

(1) Resistors, capacitors, coils, chokes, and transformer windings fail because of the effects of fungus growth and excessive moisture.
(2) Electrolytic action, often visible in the form of corrosion, takes place in resistors, coils, chokes, and transformer windings, causing eventual breakdown.
(3) Insulation on hook-up wires and cables breaks down. Fungus growth accelerates deterioration.
(4) Moisture forms electrical leakage paths on terminal boards and insulating strips, causing flashovers.

b. Tropical Maintenance. A special moistureproofing and fungiproofing treatment has been devised which, if properly applied, provides a reasonable degree of protection against fungus growth, insects, corrosion, salt spray, and excessive moisture. This treatment is explained in TB SIG 13, Moistureproofing and Fungiproofing Signal Corps Equipment, and TB SIG 72, Tropical Maintenance of Ground Signal Equipment.

c. Arctic Maintenance. Special precautions necessary to prevent poor performance or total operational failure of equipment in extremely low temperatures are explained in TB SIG 66, Winter Maintenance of Signal Equipment, and TB SIG 219, Operation of Signal Equipment at Low Temperatures.

d. Desert Maintenance. Special precautions necessary to prevent equipment failure in areas subject to extremely high temperatures, low humidity, and excessive sand and dust are explained in TB SIG 75, Desert Maintenance of Ground Signal Equipment.

e. Lubrication. The effects of extreme cold and heat on materials and lubricants are explained in TB SIG 69, Lubrication of Ground Signal Equipment. Observe all the precautions outlined in TB SIG 69 and pay strict attention to all lubrication orders when operating equipment under conditions of extreme heat and cold. Refer to paragraph 38 for lubrication instructions.

40. Rustproofing and Painting

a. The protective covers and front panel of the transmitter are constructed of an aluminum alloy with an iridite finish. Rust conditions normally will not be encountered. Corrosion of any nature should be removed by cleaning with solvent (SD) and crocus cloth or No. 0000 sandpaper if necessary.

Caution: Do not use steel wool. Minute particles frequently enter the case and cause harmful internal shorting or grounding of circuits.

b. Should painting be necessary, refer to TM 9–2851, Painting Instructions for Field Use.

Section IV. TROUBLESHOOTING AT ORGANIZATIONAL MAINTENANCE LEVEL

41. General

a. The troubleshooting and repair work that can be performed at the organizational maintenance level (operators and repairmen) is limited necessarily by the tools, test equipment, and replaceable parts available, and by the existing tactical situation. Accordingly, troubleshooting by the operators is based on the performance of the equipment and the use of the senses in determining such troubles as burned-out tubes, cracked insulators, and other faults.

b. Paragraphs 42 and 43 may help in determining which stage is at fault and in isolating the fault in that stage to the defective item, such as a tube or fuse. If the trouble cannot be located and repaired by using the methods outlined below, troubleshooting at a field maintenance level (ch. 6) will be required.

42. Visual Inspection

a. When the transmitter fails to operate properly, a visual examination of the equipment may reveal one or more of the common troubles listed below. If possible, obtain information regarding the performance of the equipment at the time the trouble appeared. This information may help in determining the trouble. Check as many of the items below as is possible before starting a systematic check of the operation of the equipment.

(1) Loose wiring, poorly soldered connections, frayed or burned insulation, or stretched leads.
(2) Broken lugs and signs of arcing on terminal boards.
(3) Split, cracked, or broken crystal holder.
(4) Blistered or discolored resistors caused by overheating.
(5) Worn, broken, or disconnected cords or plugs.
(6) Faulty relay contacts.
(7) Wires broken because of excessive vibration.
(8) Defective tubes.

b. If this inspection does not yield results, use the same procedure on all other components of the system, especially the equipment cabinet, the transmitter power supply, and the antenna. Check all fuses. See TM 11-226 or TM 11-252 for the correct fuse ratings.

43. Troubleshooting by Using Equipment Performance Check List

a. General. The equipment performance check list (*e* below) indicates the correct order of steps to be taken to operate the transmitter. It will help in locating trouble in the equipment. The check list gives the items to be checked, the normal indications of correct operation, and the corrective measures that the operator can take. When using this chart, follow the items in the order given.

b. Action or Condition. The information given in the *action or condition* column consists of various switch and control settings under which the item is to be checked. It also lists any action that must be taken to obtain the normal indication given in the *normal indication* column.

c. Normal Indication. The normal indications listed include signs that the operator can see and hear when he checks the items. If the indications are not normal, the operator should apply the recommended corrective measures.

d. Corrective Measures. The corrective measures listed indicate some of the causes of incorrect indications. In many cases, the operator may correct the trouble without turning in the equipment for repairs. If the operator cannot correct the trouble, troubleshooting by an experienced repairman is necessary.

344680 O - 55 - 4

e. Equipment Performance Check List.

	Item No.	Item	Action or condition	Normal indication	Corrective measures
PREPARATORY	1	Transmitter	Pretuned to desired operating frequency (par. 17 and 18) and properly connected in radio set or system containing necessary additional equipment (par. 9).		
	2	TEST-OFF switch	Placed in OFF position.		
	3	TUNE-OPR switch	Placed in OPR position.		
	4	Frequency selector switch on control unit.	Turned to either FREQ 1 or FREQ 2 position, depending on choice of operating frequency.		
PERFORMANCE EQUIPMENT	5	For T–278/U: VOLUME-OFF switch on Radio Set Control C–847/U.	Turned toward VOLUME position.	POWER lamp on control unit lights.	Check fuses in equipment cabinet and transmitter power supply. Check POWER indicator lamp. Refer to item 1 of the troubleshooting chart (par. 64).
		For T–416/GR: MAIN-POWER switch on control unit.	Turned to ON position.		
	6	Handset H–33/PT	Push-to-talk switch depressed.	For T–278/U: Filament power is applied to all tubes. TRANSMIT lamp on control unit lights and transmitter power supply dynamotor can be heard. For T–416/GR: Blower fan in transmitter power supply can be heard.	Check fuses in the equipment cabinet and the transmitter power supply. Check push-to-talk switch on the handset.
				Transmitter radiates an rf signal.	Check TUNE-OPR switch.
				Speaking into microphone modulates the rf signal.	Check antenna connections. Check handset, audio connector, and cable to handset. Refer to items 5 and 7 of of the troubleshooting chart (par. 64).
	7	Handset H–33/PT.	Push-to-talk switch is released.	TRANSMIT indicator lamp of Radio Set Control C–847/U goes out.	Check TEST-OFF switch. Check push-to-talk switch.
				Dynamotor or blower fan motor becomes inoperative and quiets.	Check for sticking transmitter relay in transmitter power supply.
	8	For T–278/U: VOLUME-OFF switch on Radio Set Control C–847/U. For T–416/GR: MAIN-POWER switch on control unit.	Turned to the OFF position.	POWER lamp on control unit goes out.	Check VOLUME-OFF or MAIN POWER switch on control unit. For T–278/U, check power relay in transmitter power supply.

CHAPTER 5
THEORY

44. General

This chapter contains the theory of operation for Radio Transmitters T–278/U and T–416/GR. Complete schematics of both transmitters are shown in figures 48 and 49, respectively. Because of the numerous interconnections between units of this system, all control circuits for application of power to the transmitter have been traced to their origin. In some cases, the reference symbols for the T–416/GR differ from those in the T–278/U. In these cases, two reference symbols are given for each component; one is in parentheses. The one in parentheses applies to the T–416/GR.

45. Block Diagram

(fig. 18)

The block diagrams of Radio Transmitters T–278/U and T–416/GR are identical up to the fifth doubler and driver stage. From this stage on, the T–416/GR uses different tube types to increase its power output. The signal paths through the transmitter are described below.

a. Rf Oscillator. Two crystal-controlled oscillator stages, V401 and V402, are used to allow a quick change between two preset operating frequencies. The oscillator to be used is selected by a switch that is external to the transmitter. A frequency in the range from 4.75 to 5.4375 mc, depending on the crystal used, is fed to the phase modulator tube, V403.

b. Phase Modulator. An audio signal from the second audio amplifier, V413, also is applied to phase modulator tube V403. With rf and audio voltages applied to the tube, the rf signal shifts phase at an audio rate. This produces an fm signal, at the output of the phase modulator, with a deviation of 468.75 cycles for 100 percent modulation. This output is applied to a series of multiplier stages.

c. First, Second, Third, and Fourth Doublers, and Fifth Doubler and Driver. The doubler stages, V404 through V407, and V408 (V502), multiply the crystal frequency and the modulator deviation a total of 32 times to produce the proper output frequency and deviation. Each doubler doubles its input frequency and deviation so that the output at the first, second, third, and fourth doublers, and fifth doubler and driver is 2, 4, 8, 16, and 32 times the crystal frequency, respectively. The deviation at the output of each stage is 937.5, 1,875, 3,750, 7,500, and 15,000 cycles, respectively. The fifth doubler and driver, in addition to multiplying the frequency, serves as a driver stage to supply a strong signal to the input of the power amplifier. The T–278/U uses a type 2E24 tube in the fifth doubler and driver stage. In the T–416/GR, a type 2E26 is used in this stage to allow the transmitter to be operated for longer periods of time so that it may be used in fixed station applications.

d. Power Amplifier. The power amplifier in the T–278/U consists of two type 2E24 tubes, V409 and V410. In the T–416/GR, both tubes are replaced by one type 5894 tube, V502, containing two beam power sections in the one tube. The power amplifier in both transmitters is operated in push-pull. Power output from the amplifier passes through an antenna filter to reduce harmonic emission.

e. First Audio Amplifier. Audio signals from the microphone of the handset, or signals from a radio receiver (for retransmission), are applied to first audio amplifier V411. This stage filters out the unwanted low frequencies and amplifies the audio signals. Its output is coupled to limiter tube V412.

f. Limiter. Limiter tube V412 limits the amplitude of the audio signal applied to the second audio amplifier and thereby limits the transmitter deviation.

g. Second Audio Amplifier. Second audio-amplifier tube V413 amplifies the audio signal to the approximately correct level to be applied to the phase modulator tube, V403.

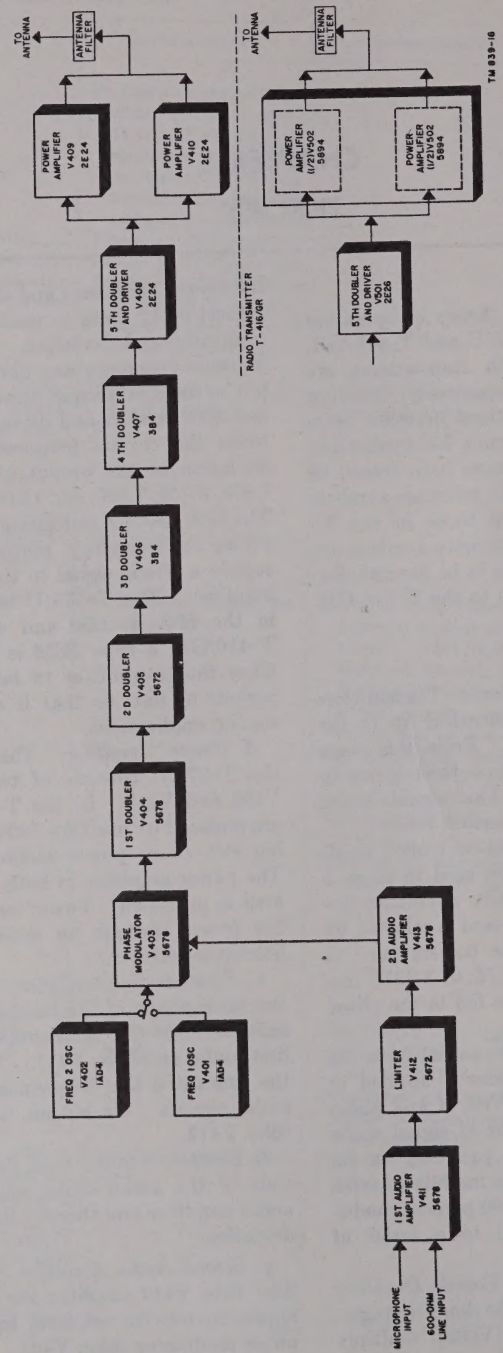

Figure 18. Radio Transmitters T-278/U and T-416/GR, block diagram.

46. Crystal Oscillator

(figs. 19 and 20)

a. Two crystal-controlled oscillator tubes, V401 and V402, are used in the transmitter. Only one oscillator operates at a time. The oscillator to be used is selected by a frequency selector switch on the control unit.

b. When power is applied to the radio set (VOLUME-OFF switch turned toward the VOLUME position for T–278/U; MAIN POWER switch to ON position for T–416/GR), a voltage is applied to the heating element of crystal oven E401 through terminal 7 of P401 (P501). Terminal 8 is used when the crystal heater is supplied by a 24-volt source. An oven thermostat maintains a uniform temperature for the two inclosed crystals (Y401 and Y402), and thus eliminates any change in the crystal operating frequency because of temperature changes. The two crystals do not differ from each other by more than 31.250 kilocycles (kc). The output frequency is therefore held within the allowable 1-mc difference, since each crystal frequency is multiplied 32 times.

c. When the frequency selector switch on the control unit is turned to the FREQ 1 position and the switch on the handset is pressed for push-to-talk operation, 1.3 volts dc is applied to the heater-cathode of tube V401 through terminal 11 of P401 (P501). Plate and screen voltage is applied simultaneously through terminal 26, and the oscillator starts to operate.

d. The cathode, control grid, and screen grid of V401 act as a triode oscillator, with the screen grid as the plate of the oscillator. A simplified equivalent schematic is shown in figure 20. When the voltages are applied to the tube, an electrical strain is exerted on the crystal. This causes it to vibrate mechanically at its resonant frequency. When it vibrates it generates an alternating-current (ac) voltage (piezoelectric effect), E_{cr}, at that frequency. E_{cr} is applied across capacitors C403 and C402. Capacitor C403 is connected between the grid and cathode of the tube; therefore, the portion of E_{cr} developed across C403 may be considered as grid voltage E_g. This grid voltage is amplified in the tube and fed back across C402. The feed-back voltage, E_g, across C402 re-excites the crystal and the cycle is repeated, maintaining oscillation.

e. Operating bias is obtained from a grid-leak circuit consisting of grid-leak resistor R403 and the combination of capacitors C403 and C465.

f. Capacitor C403 is made variable so that the oscillator frequency may be slightly adjusted if the crystal is not oscillating *exactly* at the desired frequency. Only a very slight change in frequency is possible since the oscillator frequency is controlled by the crystal and may not be changed very much from the crystal frequency.

g. The direct-current (dc) supply voltage is obtained from terminal 26 of plug P401 (P501) and is applied to the plate through voltage-dropping resistor R405 and coil L401. Additional voltage is dropped across resistor R402 to obtain the correct screen potential. Capacitor C405 keeps rf out of the power supply by bypassing the rf voltages to ground.

h. The rf oscillations produced by the oscillator (screen-to-cathode circuit) are electron coupled by the tube plate current to the plate circuit of V401. Rf output voltage is developed across plate load inductance L401 and is coupled to the phase modulator stage through capacitors C406 and C407.

i. Changing the frequency selector switch on the control unit to the FREQ 2 position switches filament voltage from tube V401 to tube V402. This action disables tube V401 by removing the filament power and puts the oscillator circuit of V402 in operation. This circuit is composed of tube V402 and the associated components and circuits identical to those already described for tube V401.

47. Phase Modulator

(figs. 21 and 22)

a. The oscillator output is coupled directly to the plate of tube V403 by capacitor C407. Capacitor C407 slightly shifts the phase of the oscillator voltage and it appears on the plate of the tube as E_1 (fig. 22Ⓐ). The output of the oscillator is also applied to the control grid of V403, as grid voltage E_g, through capacitor C406. Because of the normal action of the tube, this grid voltage is almost reversed in phase and appears as a plate voltage, E_2, almost 180° out of phase with the grid voltage. Therefore, two out-of-phase voltages, E_1 and E_2, appear at the plate of tube V403. The actual plate voltage that will appear across the phase modulator plate tank circuit will be the vector sum, or resultant, of these two voltages. This is shown as E (fig. 22Ⓐ). To accomplish phase modulation, the two voltages, E_1 and E_2, must be approximately equal in amplitude. The grid voltage would ordinarily be greatly amplified by the tube, making E_2 much greater in amplitude than E_1 which is coupled

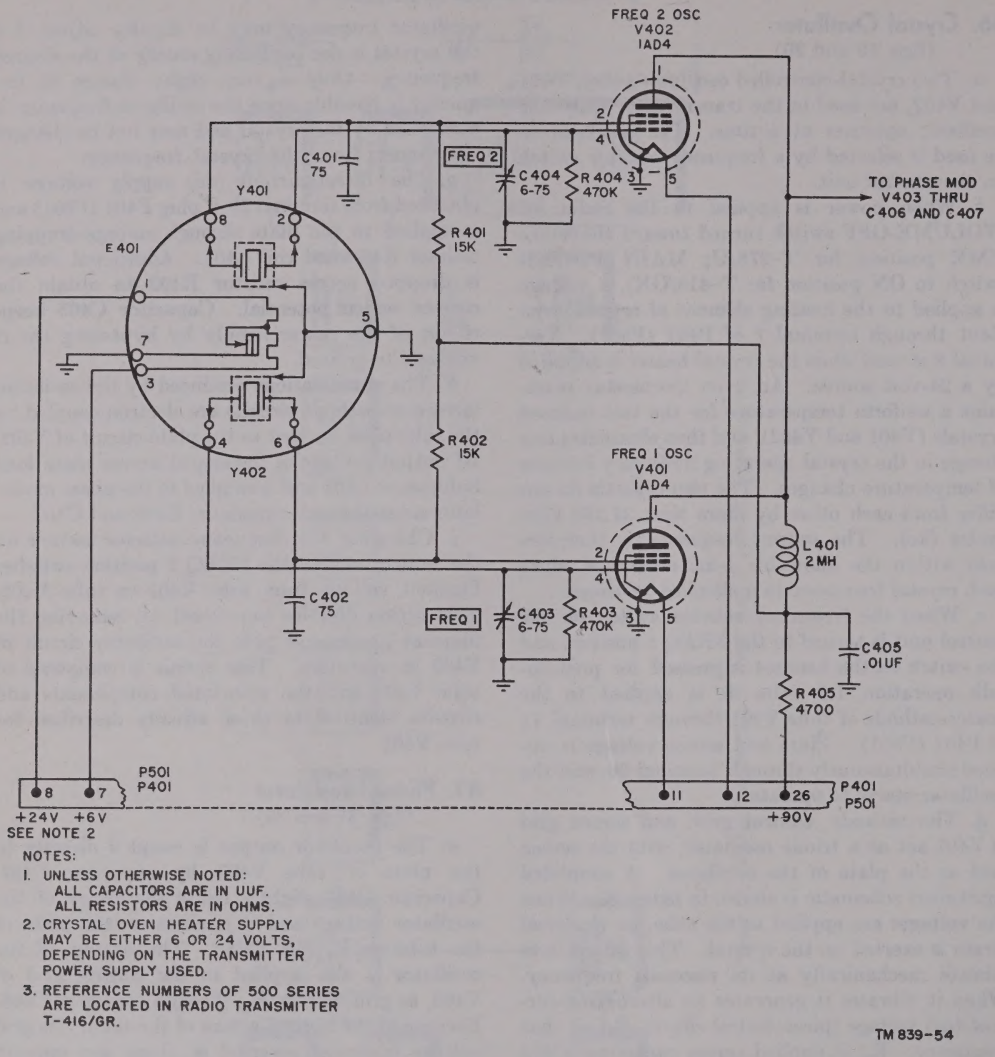

Figure 19. Radio Transmitters T-278/U and T-416/GR crystal oscillator, simplified schematic.

directly from the oscillator and gets no amplification. To counteract this, the amplification of the tube is reduced by applying a degenerative bias from the second doubler to the grid of the phase modulator through resistors R406 and R407.

b. The audio signal is applied to the grid of phase modulator tube V403 through capacitor C408 (fig. 21). When the audio signal is applied to the grid, it affects the bias of the tube and, therefore, the amplification of the grid voltage. When the audio signal goes positive, the bias on the tube is reduced and the amplification of the grid voltage is increased. This increases the amplitude of voltage E_2 at the plate (fig. 22Ⓑ). The resultant plate voltage, E, will not be shifted in phase as compared to its position when no audio signal was applied. When the audio signal goes negative, the bias on the tube is increased and the amplification of the grid voltage is decreased. This decreases voltage

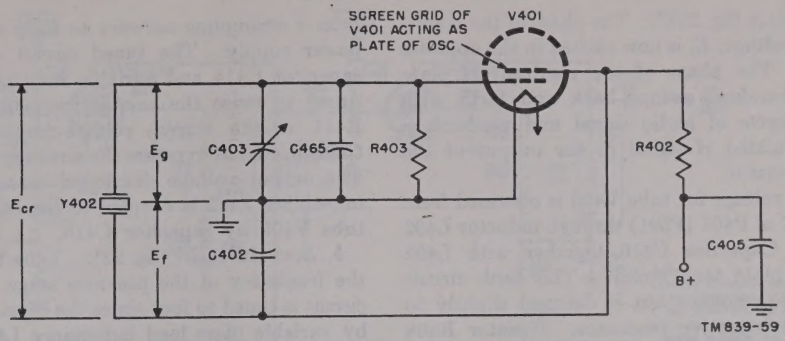

Figure 20. Equivalent circuit for crystal oscillator.

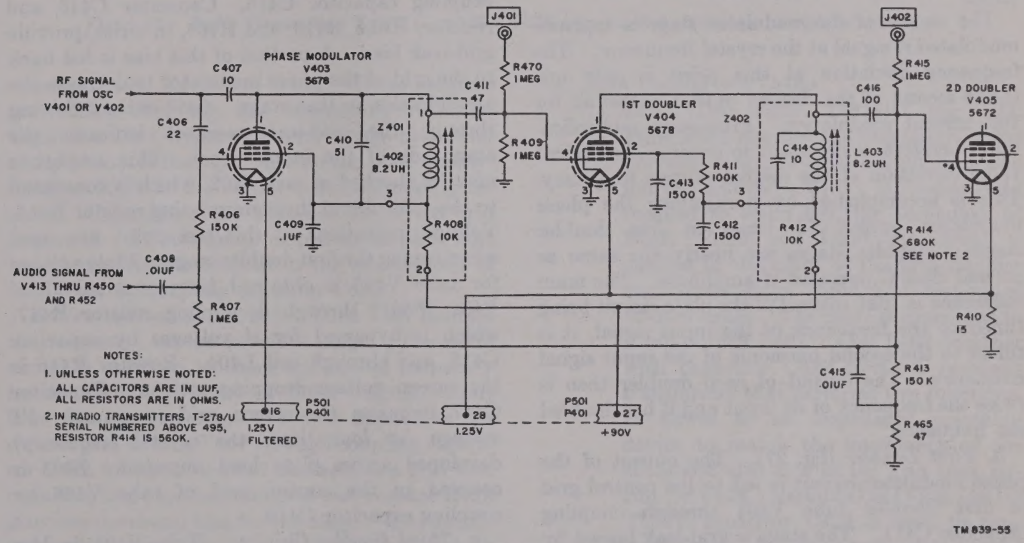

Figure 21. Radio Transmitter T-278/U and T-416/GR modulator and first doubler, simplified schematic.

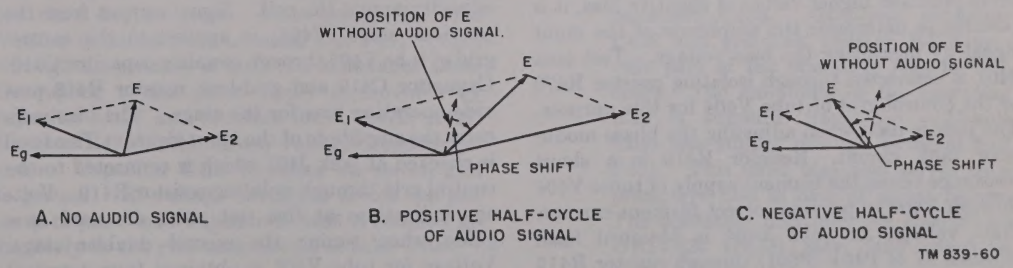

Figure 22. Vector diagram of phase modulator voltages.

E_2 at the plate (fig. 22©). The phase of the resultant plate voltage, E, is now shifted in the opposite direction. The phase of the resultant rf plate voltage, therefore, swings back and forth with each half-cycle of audio signal and produces a phase-modulated rf signal in the output of the phase modulator.

c. Plate voltage for tube V403 is obtained from terminal 27 of P401 (P501) through inductor L402 (fig. 21). Capacitor C410 together with L402 forms the plate tank circuit. This tank circuit is not made resonant but is detuned slightly to provide an inductive reactance. Resistor R408 and capacitor C409 form a decoupling circuit to keep rf out of the power supply.

48. Frequency Multiplication

The output of the modulator stage is a phase-modulated rf signal at the crystal frequency. The frequency deviation at this point is only one thirty-second of the desired output deviation for 100 percent modulation. Frequency multiplication, therefore, is necessary to produce the desired 15-kc deviation at the desired output frequency. This is accomplished by multiplying the phase modulator output 32 times in five doubler stages. Doubler stages are nearly the same as normal class C operated rf amplifiers. The main difference is that instead of the plate circuit being tuned to the frequency of the input signal, it is tuned to the second harmonic of the input signal frequency. The output of each doubler then is twice the frequency of its input and it has doubled the frequency.

a. First Doubler (fig. 27). The output of the phase modulator circuit is fed to the control grid of first doubler tube V404 through coupling capacitor C411. The stage is grid-leak biased by the action of C411 and resistor R409. The magnitude of this bias depends on the signal output of the phase modulator circuit. Since greater grid drive produces higher values of negative bias, it is possible to determine the amplitude of the input signal by measuring the bias voltage. Test jack J401 is connected through isolating resistor R470 to the control grid of tube V404 for this purpose. The jack is used when adjusting the phase modulator tank circuit. Resistor R410 is a shunt resistance across the filament supply of tubes V404 through V407 to provide correct filament current. Plate voltage for tube V404 is obtained from terminal 27 of P401 (P501) through resistor R412 and coil L403. Resistor R412 and capacitor C412 form a decoupling network to keep rf out of the power supply. The tuned circuit composed of capacitor C414 and variable inductance L403 is tuned to twice the crystal frequency. Resistor R411 is the screen voltage-dropping resistor. Capacitor C413 bypasses the screen grid to ground. The output voltage developed across plate load impedance Z402 is coupled to the control grid of tube V405 by capacitor C416.

b. Second Doubler (fig. 23). Tube V405 doubles the frequency of the previous stage. The plate circuit is tuned to four times the crystal frequency by variable plate load inductance L404 together with the distributed capacitance across the coil. Signal output from the previous stage (V404) is applied to the control grid of tube V405 through coupling capacitor C416. Capacitor C416 and resistors R414, R413, and R465, in series, provide grid-leak bias. A portion of this bias is fed back to the grid of the phase modulator to decrease the amplification in that stage. Grid current flowing through the grid-leak resistors indicates the amplitude of the input signal. This amplitude may be checked at jack J402, which is connected to the control grid through isolating resistor R415. Voltage indications at this test point are used when tuning the first doubler stage. Plate voltage for tube V405 is obtained from terminal 27 of P401 (P501) through decoupling resistor R417, which is bypassed for rf voltages by capacitor C418, and through coil L404. Resistor R416 is the screen voltage-dropping resistor. Capacitor C417 bypasses the screen grid to ground. Rf voltage (at four times the crystal frequency) developed across plate load impedance Z403 is coupled to the control grid of tube V406 by coupling capacitor C419.

c. Third Doubler (fig. 23). Tube V406 doubles the frequency of the previous stage. The plate circuit is tuned to eight times the crystal frequency by variable inductance L405 and the distributed capacity across the coil. Signal output from the previous stage (V405) is applied to the control grid of tube V406 through coupling capacitor C419. Capacitor C419 and grid-leak resistor R418 provide operating bias for the stage. The bias indicates the amplitude of the input signal. This level is checked at jack J403 which is connected to the control grid through isolating resistor R419. Voltage indications at this test point are used as a guide when tuning the second doubler stage. Voltage for tube V406 is obtained from terminal 9 of P401 (P501) through inductance L405 and

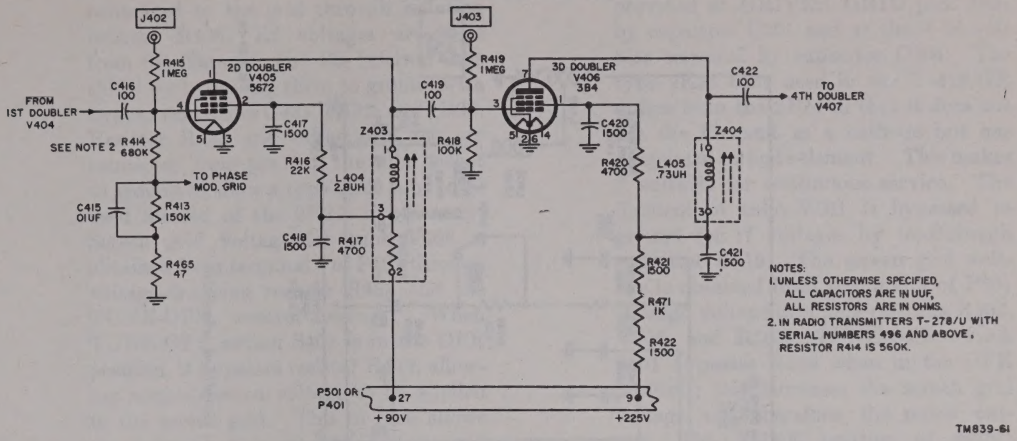

Figure 23. Radio Transmitters T–278/U and T–416/GR second and third doublers, simplified schematic.

resistors R421, R471, and R422. These resistors are voltage-dropping and decoupling resistors. Capacitor C421 bypasses the rf voltage to ground and prevents it from getting into the plate supply. Resistor R420 is the screen voltage-dropping resistor. Capacitor C420 bypasses the screen grid to ground. Rf voltage developed across plate load impedance Z404 is coupled to the control grid of tube V407 by coupling capacitor C422.

d. Fourth Doubler (fig. 24). Tube V407 doubles the frequency of the previous stage. The plate circuit is tuned to 16 times the crystal frequency by the variable primary of Z405. Signal output from the previous stage (V406) is applied to the control grid of tube V407 through coupling capacitor C422. Capacitor C422 also acts as a grid-leak capacitor and together with grid-leak resistor R423 provides operating bias for the stage. The amplitude of the input signal may be checked at jack J404 which is connected to the control grid through isolating resistor R424. Voltage indications at this test point are used as a guide when tuning the third doubler stage. Plate voltage for tube V407 is obtained from terminal 9 of P401 (P501) through the primary of tank coil inductance L406. Decoupling of the plate supply is provided by capacitor C424 and resistors R426, R472, R427. Resistor R425 is the screen voltage-dropping resistor. Capacitor C423 bypasses the screen grid to ground. Rf voltage developed across the primary of plate load impedance Z405 is coupled inductively to the grid tank circuit of tube V408.

e. Fifth Doubler and Driver.

(1) *Radio Transmitter T–278/U* (fig. 24). Tube V408 doubles the frequency of the previous stage. Signal output from the fourth doubler, V407, is inductively coupled to coil L406, the secondary of Z405. From coil L406 the signal is applied to the input of the fifth doubler and driver stage through a section of 50-ohm cable. The cable is connected to a tap on coil L407. Coil L407 together with capacitor C429 forms a resonant transformer that performs two functions. It serves as an impedance matching device to match the impedance of the cable and also acts as the grid tank circuit for V408. Variable DRIVER GRID TUNE capacitor C429 is used to tune the circuit to 16 times the crystal frequency. The signal voltage developed across the tank circuit is applied to the control grid of V408 through grid-leak capacitor C428. Grid-leak capacitor C428 and grid-leak resistor R435 provide part of the operating bias for the stage. The remainder of the operating bias is supplied from the —25-volt fixed bias supply through terminal 6 of P401. This fixed bias also serves as a protective bias in case of signal failure. The operating bias may be checked at DRIVER GRID jack J405 which is

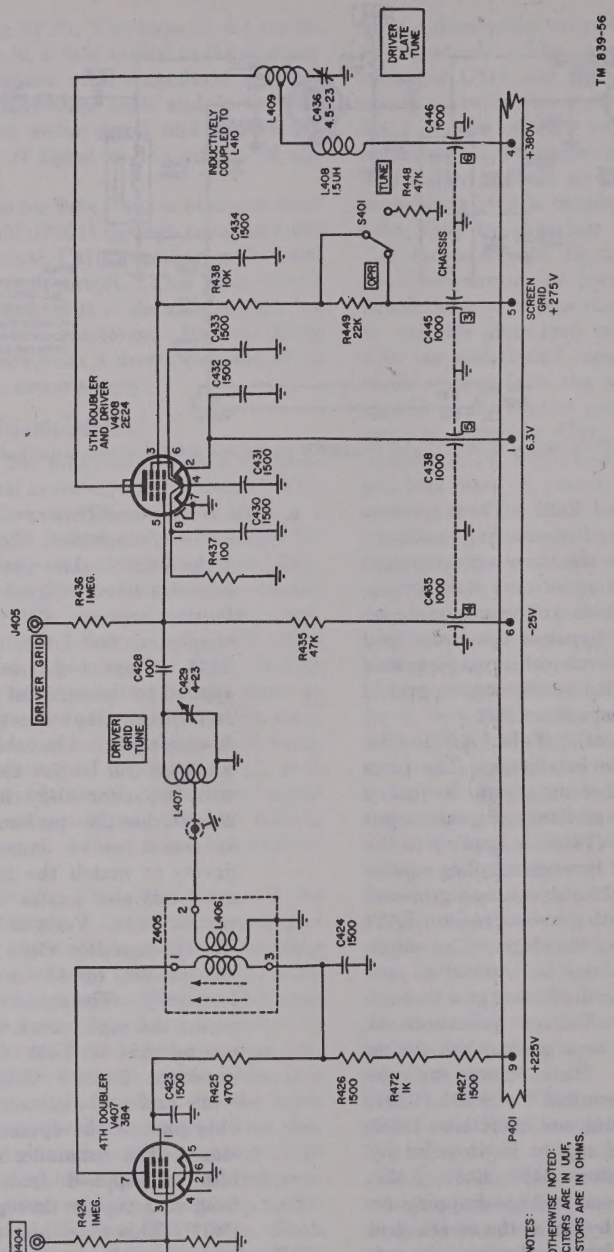

Figure 24. Radio Transmitter T-278/U, fourth doubler and fifth doubler and driver, simplified schematic.

connected to the grid through isolating resistor R436. Rf voltages are kept from the filaments and the internal tube shield by bypassing them to ground with bypass capacitors C431, C432, and C433. Resistor R437 and capacitor C430 are connected from pin 1 of the tube socket to ground to allow a type 2E26 tube to be used instead of the 2E24, if necessary. Screen grid voltage for tube V408 is obtained from terminal 5 of P401 through voltage-dropping resistor R438 and the TUNE-OPR control circuit. When TUNE-OPR switch S401 is in the OPR position, it bypasses resistor R449, allowing normal screen voltage to be applied to the screen grid. This in turn allows the tube to draw normal current and produce a normal power output. When switch S401 is in the TUNE position, resistor R448 is connected in the circuit and, together with resistor R449, forms a voltage divider to ground. This voltage divider greatly reduces the screen grid voltage which, in turn, reduces the current through the tube and, therefore, the power output. Capacitor C434 is a screen grid bypass capacitor and bypasses rf voltage to ground. Plate voltage for tube V408 is obtained from terminal 4 of P401 through inductances L408 and L409. Coil L408 is an rf choke used to keep rf out of the power supply. Coil L409 and variable DRIVER PLATE TUNE capacitor C436 form the plate tuned circuit, which is tuned by capacitor C436 to 32 times the crystal frequency. The rf voltage developed across this circuit is inductively coupled to the power amplifier stage. Capacitors C435, C438, C445, and C446 are feedthrough capacitors that bypass to ground any rf voltages on the leads passing through them.

(2) *Radio Transmitter T–416/GR* (fig. 25). The signal output of the fourth doubler is coupled to the control grid of fifth doubler and driver tube V501 in the same manner as in Radio Transmitter T–278/U. The component parts in the T–416/GR perform the same functions as their corresponding parts in the T–278/U. Additional rf bypassing is provided at DRIVER GRID jack J501 by capacitor C501 and at the —25-volt bias terminal by capacitor C504. The type 2E26 tube used in the T–416/GR differs from the 2E24 in that it does not use the filament as a cathode but has a separate cathode element. This makes it suitable for continuous service. The filament of tube V501 is bypassed to ground for rf voltages by feedthrough capacitor C519. The screen grid voltage is obtained from terminal 3 of P501 through voltage-dropping resistors R505, R506, and R503. TUNE-OPR switch S501 bypasses R506 when in the OPR position; this increases the screen grid voltage and, therefore, the power output. The TUNE position of switch S501 is used to lower the transmitter power output during tuning adjustments. The plate voltage is also obtained from terminal 3 of P501. It is applied to the plate of the tube through coils L503 and L502. Coil L503 is an rf choke and, together with bypass capacitor C506 and feedthrough capacitor C521, keeps rf out of the power supply. Coil L502 and variable DRIVER PLATE TUNE capacitor C507 form the plate tank circuit which is tuned to 32 times the crystal frequency by capacitor C507. The output voltage developed across L502 is inductively coupled to the power-amplifier stage.

49. Power Amplifier

a. Radio Transmitter T–278/U (fig. 26). Tubes V409 and V410 are operated in push-pull. The grid tank circuit is tuned to the output frequency by FINAL GRID TUNE 1 and FINAL GRID TUNE 2 variable capacitors C439 and C437. The push-pull rf voltage developed across inductance L410 is applied to the control grid of each tube 180° out of phase. Dc grid current alternately flowing from each tube through resistor R440 provides a portion of the operating bias. The remainder of the necessary operating bias is supplied by the —25-volt fixed bias supply through terminal 6 of P401. The fixed bias also serves as protective bias for the tube in case of signal failure. Resistors R441 and R442 allow a type 2E26 tube to be used instead of a 2E24, if necessary. Capacitors C440, C441, and C442 bypass the filament to

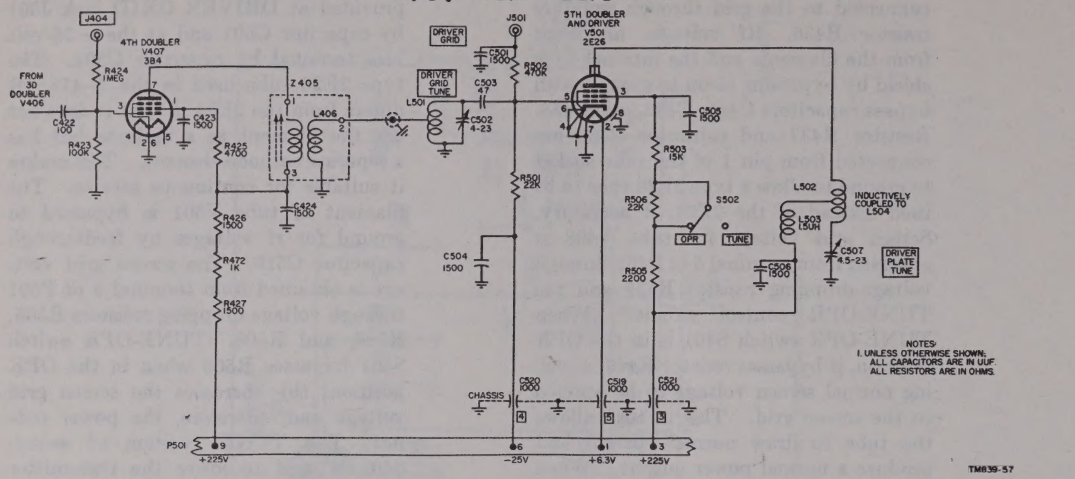

Figure 25. Radio Transmitter T–416/GR fourth doubler and fifth doubler and driver, simplified schematic.

ground for rf voltages. Screen grid voltage is supplied to each tube from terminal 5 of plug P401. It is applied through switch S401 when it is in the OPR position or through resistor R449 when the switch is in the TUNE position. Resistors R443 and R444 are voltage-dropping resistors for each grid. The operation of the TUNE-OPR switch is explained in paragraph 48*e*(1). Capacitors C443 and C444 bypass the screen grids to the filament center tap for rf voltages. The final plate tank circuit operates as a tuned quarter-wave line. The parallel plate lines (L416 and L417) are made of silver and rhodium-plated copper tubing. At the very-high frequency (vhf) at which the plate tank operates, the plate lines act as an inductance. Variable capacitor C448 is preset to the operating frequency and provides approximate resonance in the plate tank circuit. The FINAL PLATE TUNE shorting bar, used for fine tuning, varies the inductance of the tank by shorting a portion of the plate lines. Rf energy is fed to the open end of each plate line through coupling capacitors C447 and C449. Plate voltage for each tube is obtained from terminal 4 of P401 through resistors R446 and R445 or R447. The plate leads to each tube pass through the copper tubing of the plate tank circuit. All plate current flows through resistor R446. The value of this current is indicated by the voltage drop across the resistor and may be measured by a meter across PL CUR jacks J409 and J410. A check for equal plate current from each tube (balance) may be made at BAL jacks J407 and J408. Equal plate currents from V409 and V410 flowing through resistors R445 and R447 will cause equal and opposite voltages to be developed across the two resistors so that no voltage appears across the BAL jacks. If one plate current is greater than the other, the opposing voltages across the two resistors will not be equal and a resultant voltage will appear at the BAL jacks. Therefore, any voltage reading on a meter connected across these jacks indicates a difference of current from the two plates. Zero voltage on the meter indicates a balance. Capacitors C450 and C452 are fed through capacitors that bypass to ground any rf voltages on the leads passing through them.

b. Radio Transmitter T–416/GR (fig. 27). The power-amplifier stage of Radio Transmitter T–416/GR functions in the same manner as the one in the T–278/U (*a* above). The component parts in the T–416/GR perform the same functions as their corresponding parts in the T–278/U. The major difference in the two circuits is the type of tubes used. The T–416/GR uses a type 5894 dual beam power amplifier instead of two type 2E24 tubes. This tube is capable of producing a greater power output.

50. Output Circuit
(figs. 26 and 27)

The output of the power amplifier is inductively coupled from the plate lines to the output circuit by variable COUPLING loop L412 (L507). The amount of coupling between the two circuits may

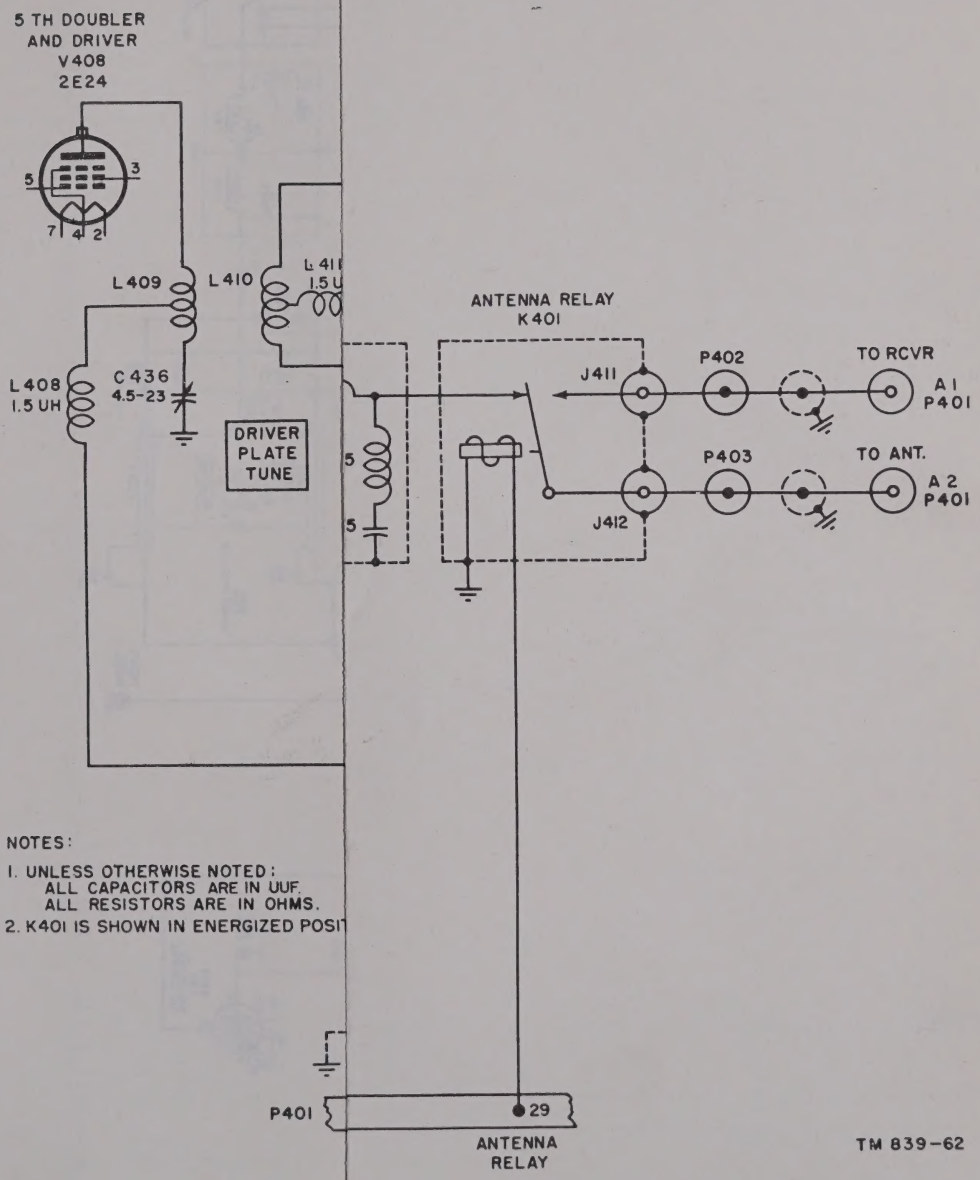

328754 O - 55 (Face p. 36)

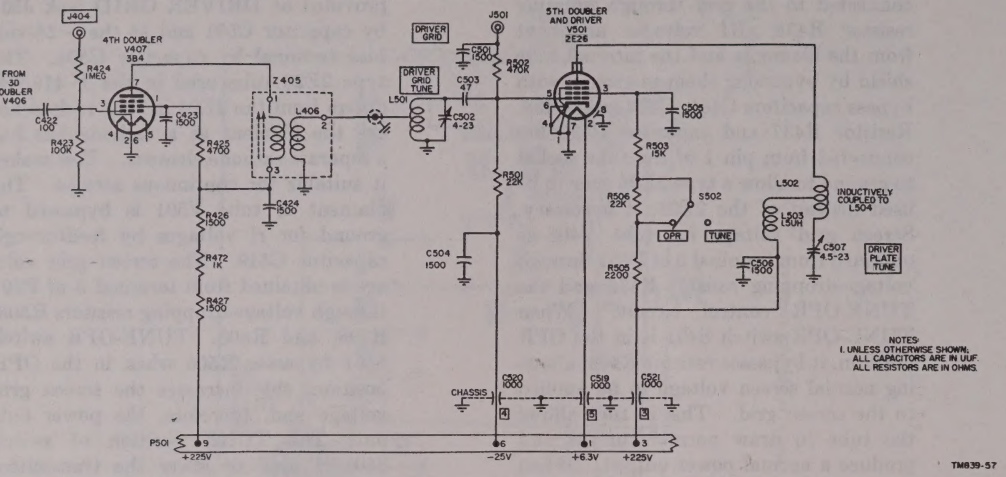

Figure 25. Radio Transmitter T–416/GR fourth doubler and fifth doubler and driver, simplified schematic.

ground for rf voltages. Screen grid voltage is supplied to each tube from terminal 5 of plug P401. It is applied through switch S401 when it is in the OPR position or through resistor R449 when the switch is in the TUNE position. Resistors R443 and R444 are voltage-dropping resistors for each grid. The operation of the TUNE-OPR switch is explained in paragraph 48*e*(1). Capacitors C443 and C444 bypass the screen grids to the filament center tap for rf voltages. The final plate tank circuit operates as a tuned quarter-wave line. The parallel plate lines (L416 and L417) are made of silver and rhodium-plated copper tubing. At the very-high frequency (vhf) at which the plate tank operates, the plate lines act as an inductance. Variable capacitor C448 is preset to the operating frequency and provides approximate resonance in the plate tank circuit. The FINAL PLATE TUNE shorting bar, used for fine tuning, varies the inductance of the tank by shorting a portion of the plate lines. Rf energy is fed to the open end of each plate line through coupling capacitors C447 and C449. Plate voltage for each tube is obtained from terminal 4 of P401 through resistors R446 and R445 or R447. The plate leads to each tube pass through the copper tubing of the plate tank circuit. All plate current flows through resistor R446. The value of this current is indicated by the voltage drop across the resistor and may be measured by a meter across PL CUR jacks J409 and J410. A check for equal plate current from each tube (balance) may be made at BAL jacks J407 and J408. Equal plate currents from V409 and V410 flowing through resistors R445 and R447 will cause equal and opposite voltages to be developed across the two resistors so that no voltage appears across the BAL jacks. If one plate current is greater than the other, the opposing voltages across the two resistors will not be equal and a resultant voltage will appear at the BAL jacks. Therefore, any voltage reading on a meter connected across these jacks indicates a difference of current from the two plates. Zero voltage on the meter indicates a balance. Capacitors C450 and C452 are fed through capacitors that bypass to ground any rf voltages on the leads passing through them.

b. Radio Transmitter T–416/GR (fig. 27). The power-amplifier stage of Radio Transmitter T–416/GR functions in the same manner as the one in the T–278/U (*a* above). The component parts in the T–416/GR perform the same functions as their corresponding parts in the T–278/U. The major difference in the two circuits is the type of tubes used. The T–416/GR uses a type 5894 dual beam power amplifier instead of two type 2E24 tubes. This tube is capable of producing a greater power output.

50. Output Circuit

(figs. 26 and 27)

The output of the power amplifier is inductively coupled from the plate lines to the output circuit by variable COUPLING loop L412 (L507). The amount of coupling between the two circuits may

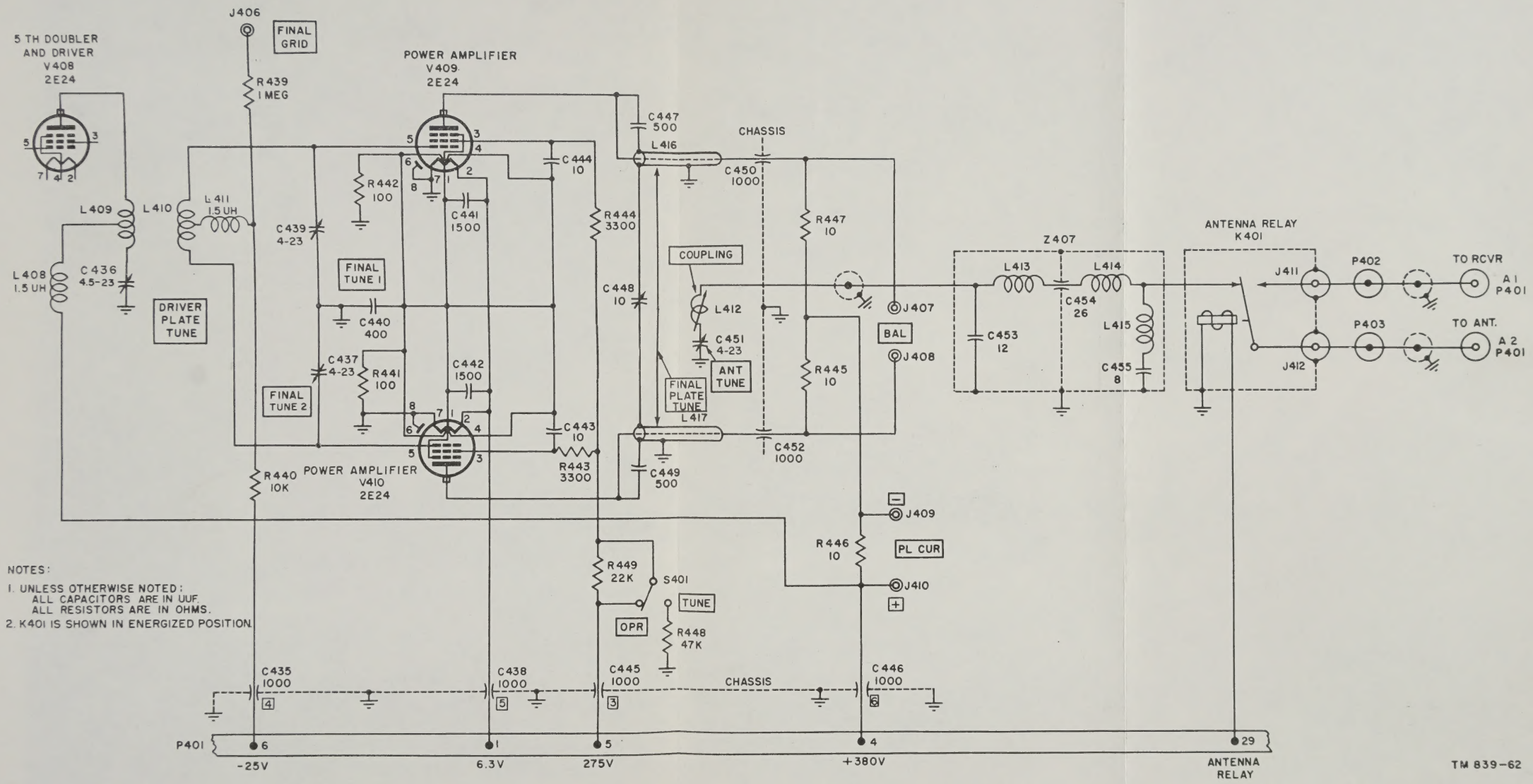

NOTES:

1. UNLESS OTHERWISE NOTED:
   ALL CAPACITORS ARE IN UUF.
   ALL RESISTORS ARE IN OHMS.
2. K401 IS SHOWN IN ENERGIZED POSITION.

Figure 26. Radio Transmitter T-278/U, power amplifiers and output circuits, simplified schematic.

328754 O - 55 (Face p. 36)

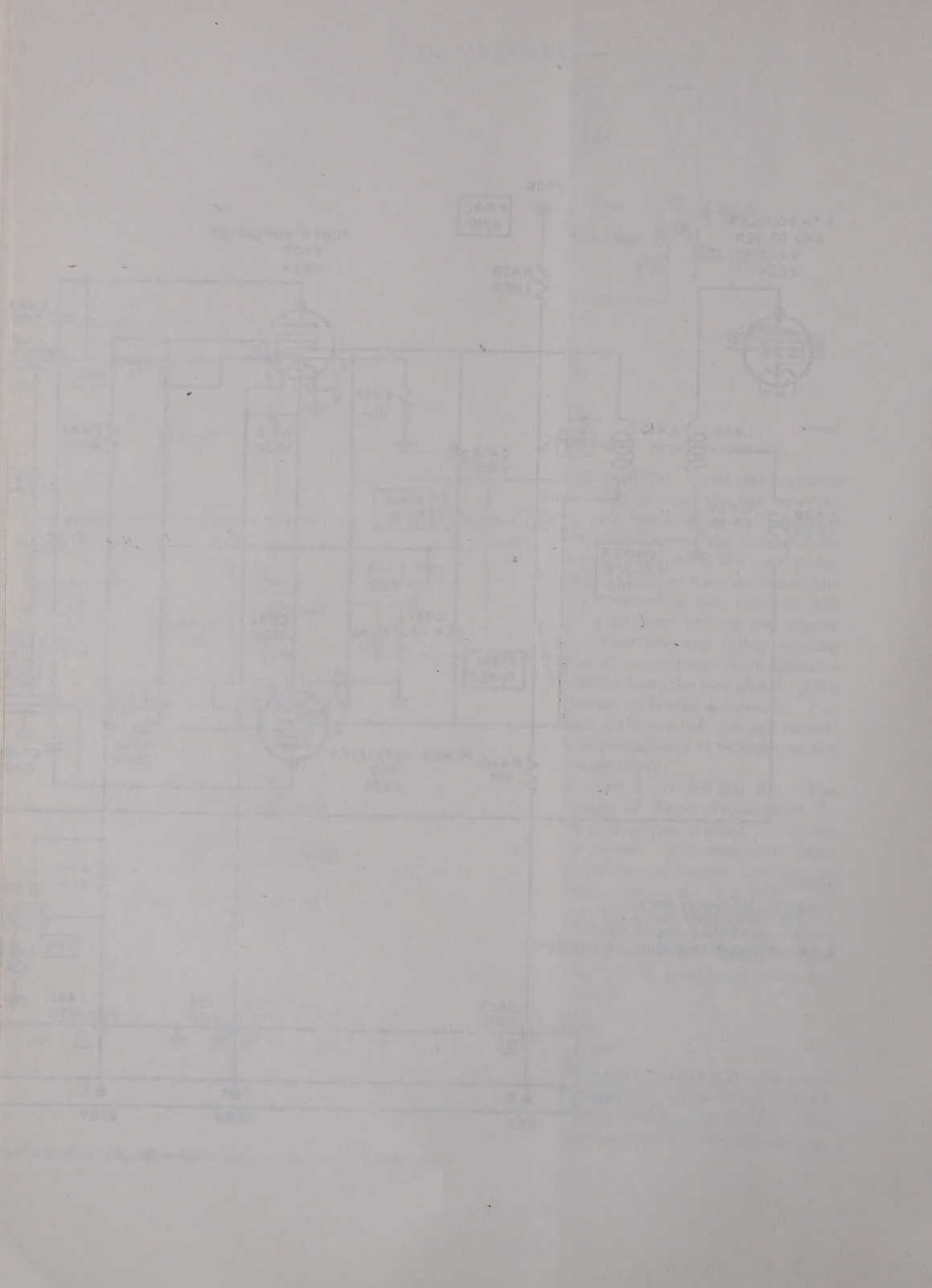

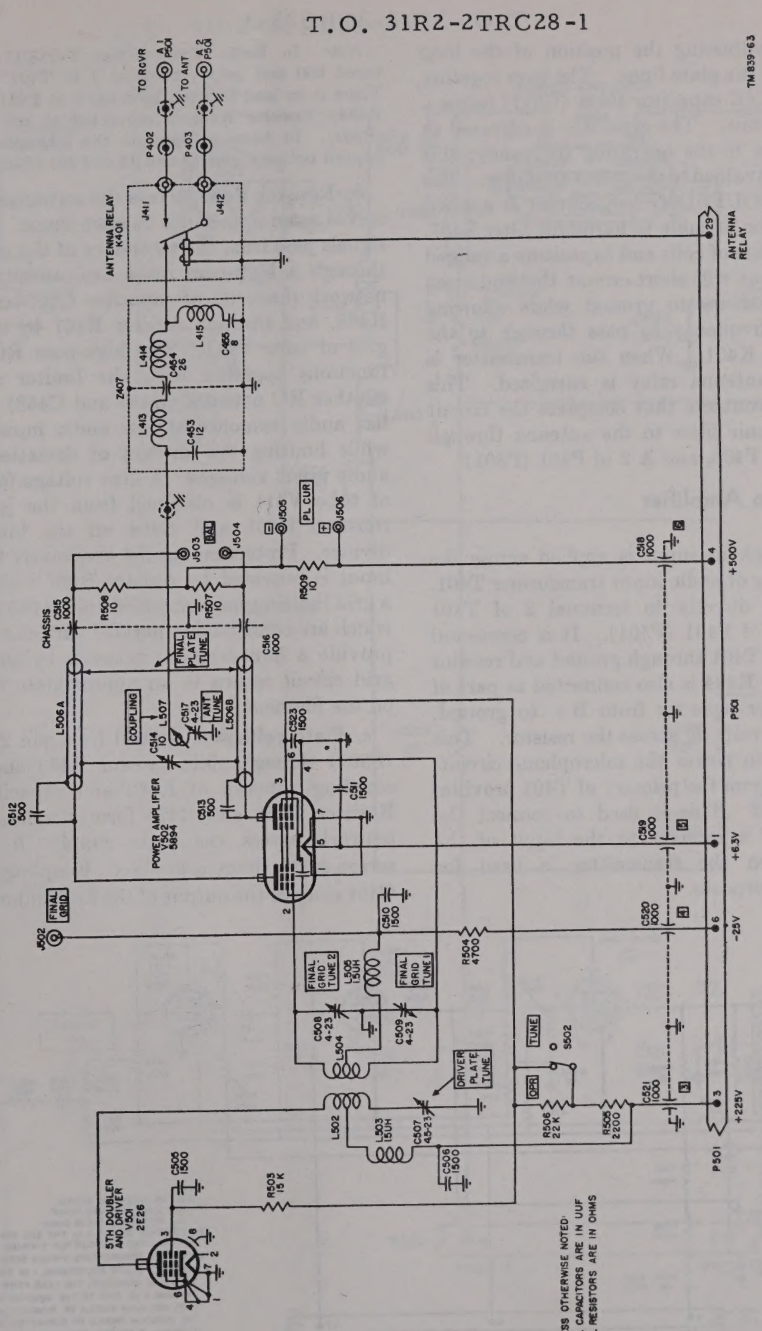

Figure 27. Radio Transmitter T-416/GR, power amplifier and output circuits, simplified schematic.

be varied by adjusting the position of the loop with respect to the plate lines. The loop together with ANT TUNE capacitor C451 (C517) forms a series tuned circuit. The capacitor is adjusted to tune the circuit to the operating frequency; this presents a resistive load to the power amplifier. The signal in the COUPLING loop circuit is applied through a section of cable to harmonic filter Z407. This filter consists of coils and capacitors arranged in a manner that will short-circuit the undesired harmonic frequencies to ground while allowing the operating frequency to pass through to the antenna relay K401. When the transmitter is operated, the antenna relay is energized. This closes the two contacts that complete the circuit from the harmonic filter to the antenna through jack J412, plug P403, and A 2 of P401 (P501).

51. First Audio Amplifier

(fig. 28)

a. The microphone input is applied across the 150-ohm winding of audio input transformer T401. It is connected directly to terminal 2 of T401 through pin 13 of P401 (P501). It is connected to terminal 1 of T401 through ground and resistor R434. Resistor R434 is also connected as part of a voltage divider network from B+ to ground. This develops 2 volts dc across the resistor. This voltage is used to power the microphone circuit. A second winding on the primary of T401 provides a 600-ohm input. This is used to connect the audio output of a receiver to the input of the transmitter when the transmitter is used for retransmission purposes.

Note. In Radio Transmitters T-278/U serial. numbered 600 and below, terminal 1 of T401 is grounded. There is no lead between terminal 1 of T401 and resistor R434. Resistor R434 is connected to pin 15 of P401 (P501). In these equipments the microphone input is applied between pins 13 and 15 of P401 (P501).

b. Resistor R469, across the secondary of T401, serves as an impedance balance shunt. The audio signals pass from the secondary of the transformer through a high-pass resistance-capacitance (RC) network made up of capacitor C463 and resistor R468, and through resistor R467 to the control grid of tube V411. The high-pass RC network functions together with the limiter stage and another RC network (R456 and C458) to allow a flat audio response at low audio input voltages while limiting the amount of deviation at high audio input voltages. A bias voltage for the grid of tube V411 is obtained from the junction of resistors R461 and R464 on the bias voltage divider. Protection against excessively high audio input is provided by resistor R467 which acts as a grid limiting resistor. Resistors R465 and R466, which are connected in parallel with the filaments, provide a hum-bucking network by providing a grid circuit return to an approximate center tap on the filament.

c. Plate voltage is applied from pin 27 of P401 (P501) through plate resistor R463 and the decoupling network of R462 and capacitor C462. Resistor R458 and R474 form a voltage divider network across the plate supply, from which screen grid voltage is applied. Coupling capacitor C461 couples the output of the first audio amplifier

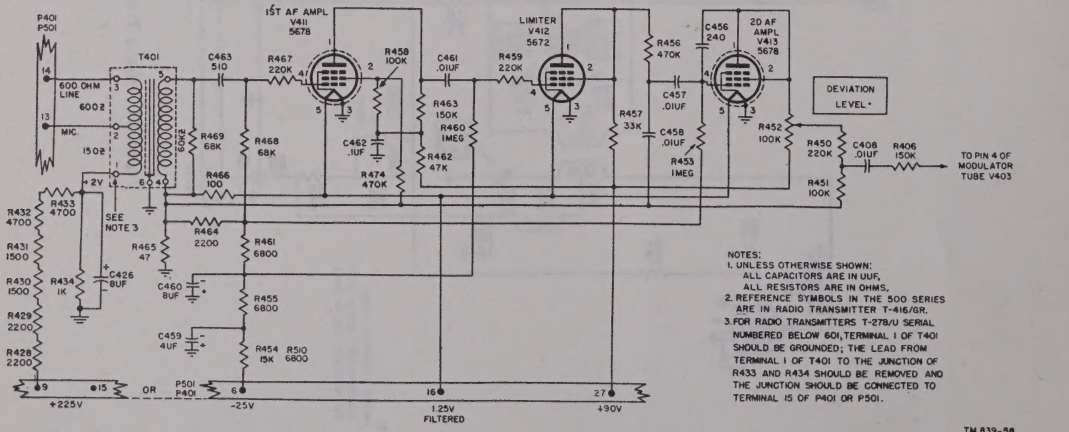

Figure 28. Radio Transmitter T-278/U, or T-416/GR, audio stages, simplified schematic.

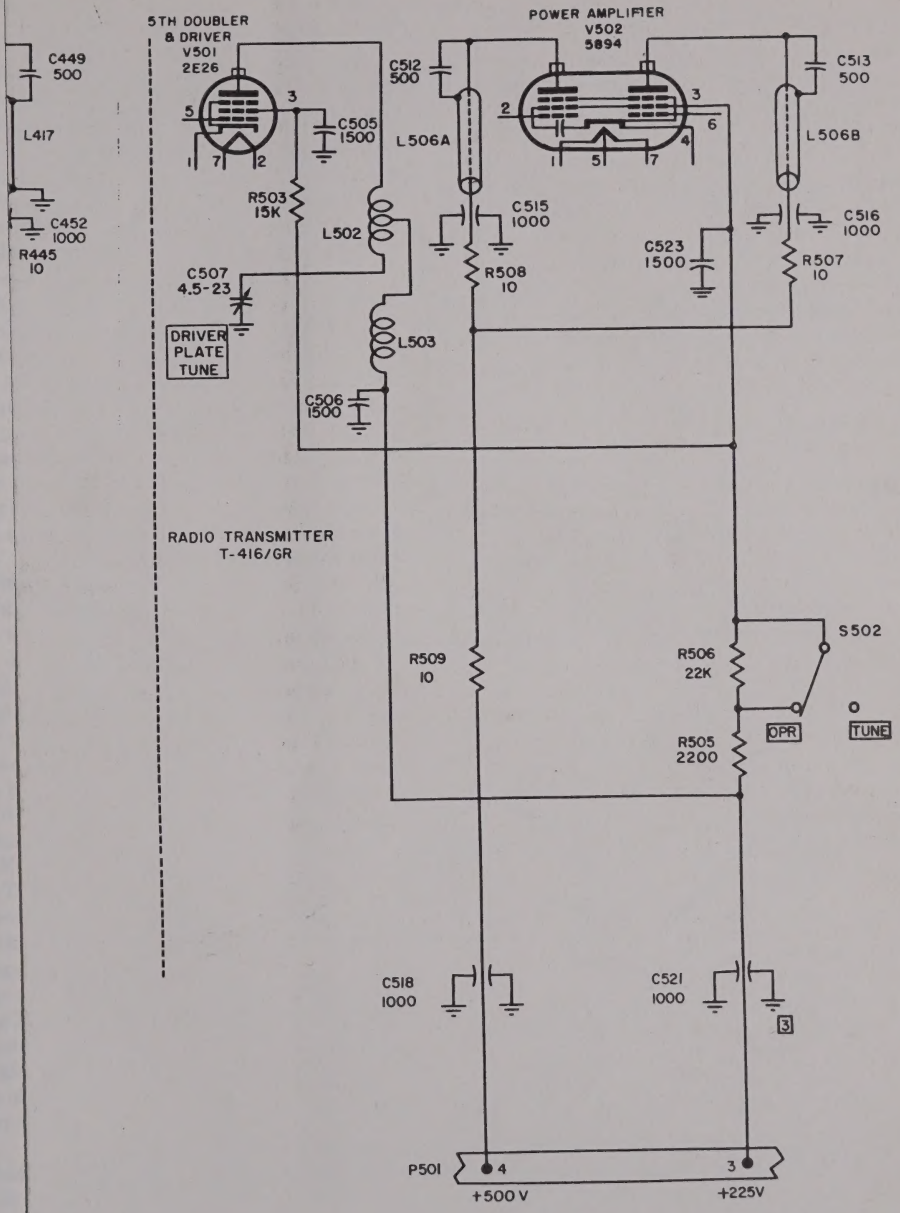

RWISE SHOWN;
ARE IN OHMS,
ARE IN UUF.

UMBERS IN THE 500
R TO RADIO TRANSMITTER

TM839-68

be varied by adjusting the position of the loop with respect to the plate lines. The loop together with ANT TUNE capacitor C451 (C517) forms a series tuned circuit. The capacitor is adjusted to tune the circuit to the operating frequency; this presents a resistive load to the power amplifier. The signal in the COUPLING loop circuit is applied through a section of cable to harmonic filter Z407. This filter consists of coils and capacitors arranged in a manner that will short-circuit the undesired harmonic frequencies to ground while allowing the operating frequency to pass through to the antenna relay K401. When the transmitter is operated, the antenna relay is energized. This closes the two contacts that complete the circuit from the harmonic filter to the antenna through jack J412, plug P403, and A 2 of P401 (P501).

51. First Audio Amplifier

(fig. 28)

a. The microphone input is applied across the 150-ohm winding of audio input transformer T401. It is connected directly to terminal 2 of T401 through pin 13 of P401 (P501). It is connected to terminal 1 of T401 through ground and resistor R434. Resistor R434 is also connected as part of a voltage divider network from B+ to ground. This develops 2 volts dc across the resistor. This voltage is used to power the microphone circuit. A second winding on the primary of T401 provides a 600-ohm input. This is used to connect the audio output of a receiver to the input of the transmitter when the transmitter is used for retransmission purposes.

Note. In Radio Transmitters T-278/U serial numbered 600 and below, terminal 1 of T401 is grounded. There is no lead between terminal 1 of T401 and resistor R434. Resistor R434 is connected to pin 15 of P401 (P501). In these equipments the microphone input is applied between pins 13 and 15 of P401 (P501).

b. Resistor R469, across the secondary of T401, serves as an impedance balance shunt. The audio signals pass from the secondary of the transformer through a high-pass resistance-capacitance (RC) network made up of capacitor C463 and resistor R468, and through resistor R467 to the control grid of tube V411. The high-pass RC network functions together with the limiter stage and another RC network (R456 and C458) to allow a flat audio response at low audio input voltages while limiting the amount of deviation at high audio input voltages. A bias voltage for the grid of tube V411 is obtained from the junction of resistors R461 and R464 on the bias voltage divider. Protection against excessively high audio input is provided by resistor R467 which acts as a grid limiting resistor. Resistors R465 and R466, which are connected in parallel with the filaments, provide a hum-bucking network by providing a grid circuit return to an approximate center tap on the filament.

c. Plate voltage is applied from pin 27 of P401 (P501) through plate resistor R463 and the decoupling network of R462 and capacitor C462. Resistor R458 and R474 form a voltage divider network across the plate supply, from which screen grid voltage is applied. Coupling capacitor C461 couples the output of the first audio amplifier

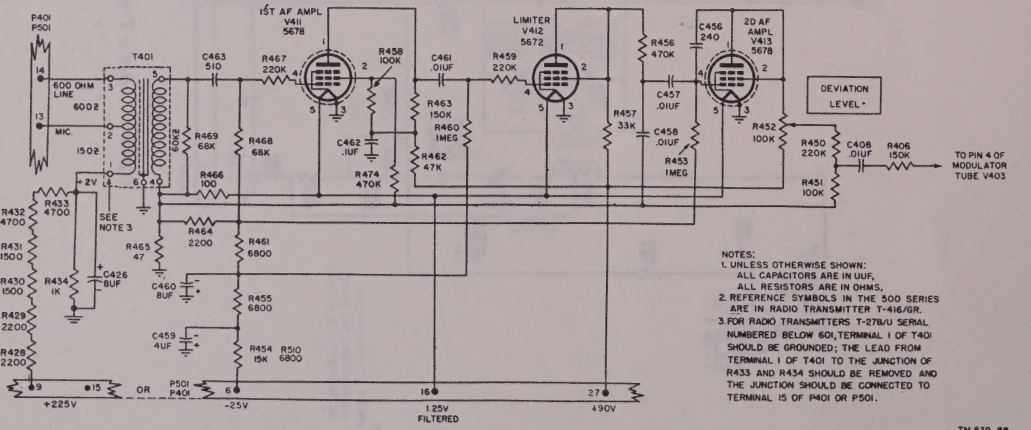

Figure 28. Radio Transmitter T-278/U, or T-416/GR, audio stages, simplified schematic.

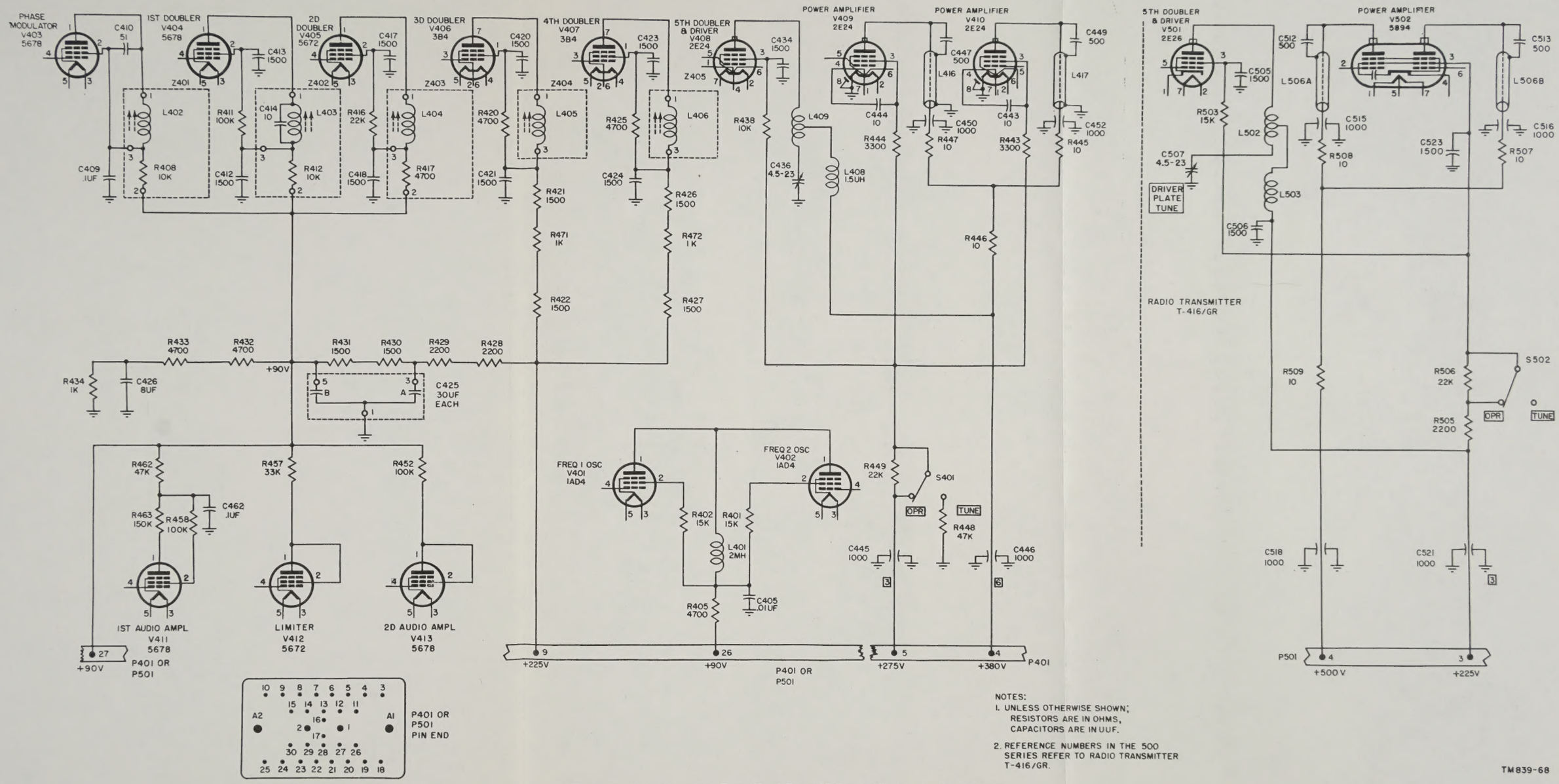

NOTES:
1. UNLESS OTHERWISE SHOWN; RESISTORS ARE IN OHMS, CAPACITORS ARE IN UUF.
2. REFERENCE NUMBERS IN THE 500 SERIES REFER TO RADIO TRANSMITTER T-416/GR.

TM839-68

Figure 29. Radio Transmitters T-278/U and T-416/GR B+ distribution, simplified schematic.

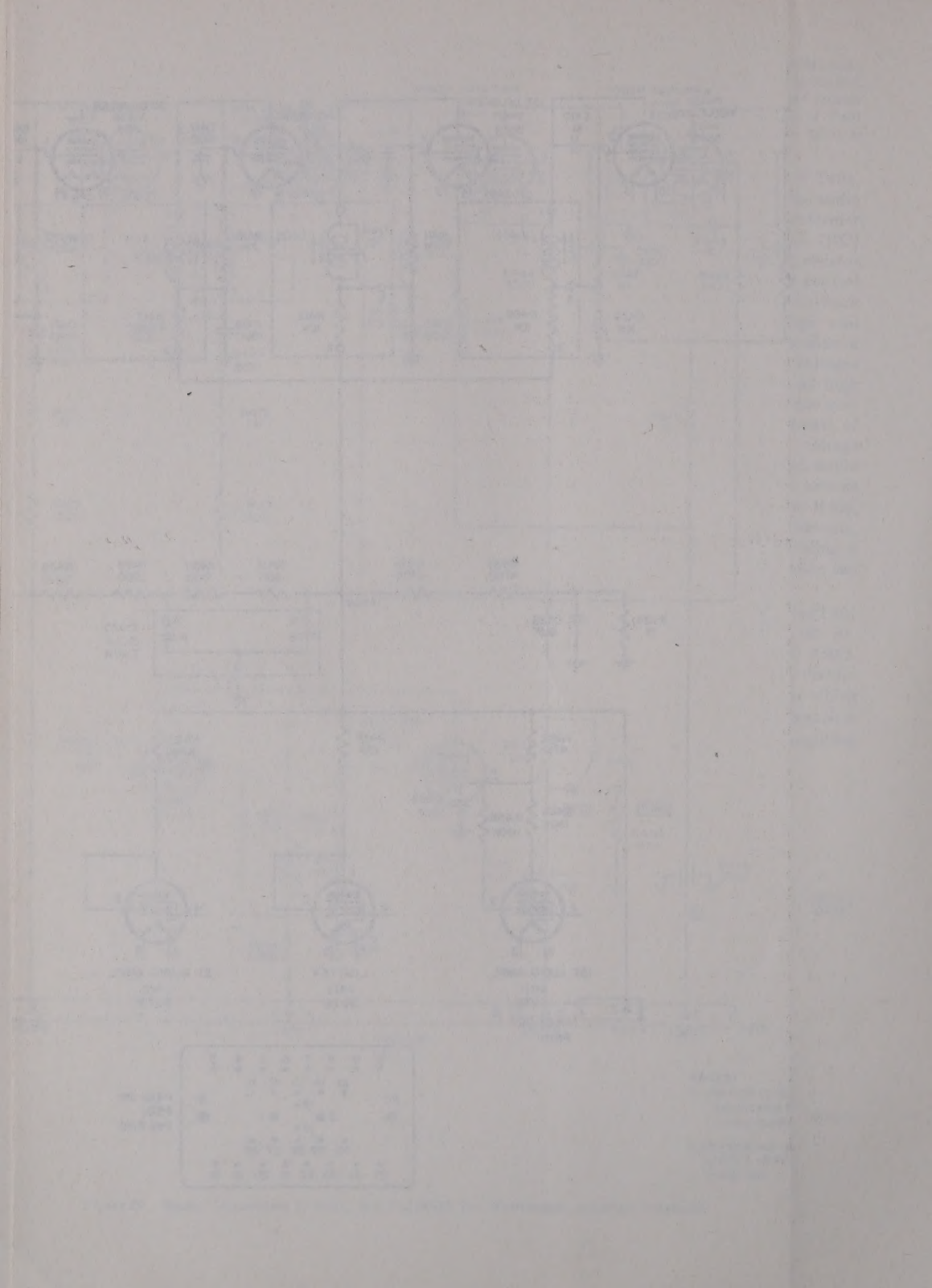

to the limiter stage through grid limiting resistor R459.

52. Limiter

(fig. 28)

Amplified audio signals coupled through capacitor C461 are impressed on the control grid of limiter tube V412 through grid limiting resistor R459. Grid bias voltage is obtained from the junction of resistors R455 and R461, on the bias voltage divider, through grid resistor R460. Plate and screen voltage is applied from pin 27 of P401 (P501) through plate resistor R457. Tube V412 limits the amplitude of high audio input voltages. At low audio input voltages, it functions as an ordinary amplifier. The limiter output is applied to a frequency compensating network composed of a low-pass RC filter, composed of resistor R456 and capacitor C458. This network limits the deviation caused by the higher audio frequencies. Coupling to the grid of tube V413 is made through coupling capacitor C457.

53. Second Audio Amplifier

(fig. 28)

Tube V413 is the final audio amplifier and is used to drive phase modulator tube V403. Resistor R453 is the grid resistor. The plate and screen grid of tube V413 receive operating voltage through plate load resistor R452. The variable tap of resistor R452 is used to adjust the audio level to be applied to the phase modulator (par. 70). Adjusting the audio level applied to the phase modulator in turn adjusts the deviation level. Resistor R452, therefore, is used as the DEVIATION LEVEL control. Resistors R450 and R451 form a voltage divider and further reduce the audio level. This allows resistor R452 to be operated in the high resistance portion of its range and aids in fine adjustment of the control. Resistor R451 is connected to the filament center tap (junction of R465 and R466) instead of ground to provide hum-bucking action. The plate of tube V413 is connected to the control grid by capacitor C456 to provide inverse feedback to reduce distortion. The audio output voltage is applied to the phase modulator stage through coupling capacitor C408 and modulator grid resistor R406.

54. B+ Distribution

(fig. 29)

From terminal 9 of P401 (P501), 225 volts dc is applied across a voltage divider network consisting of resistors R428 through R434. Filtering for the network is obtained by capacitors C425A, C425B, and C426. The network is tapped at the 90-volt point (junction of R431 and R432) and is used to supply tubes V403 through V405 and V411 through V413. The 90-volt tap is also applied to terminal 27 of P401 (P501) where it is applied to external switching circuits and brought back to terminal 26 to supply V401 and V402. Tubes V406 and V407 receive plate and screen voltages from the high voltage end of the voltage divider (terminal 9 of P401 (P501)) through various voltage-dropping resistors. The driver and power-amplifier stages are supplied from voltage sources other than the voltage divider described above. Terminals 4 and 5 of P401 supply the power stages of the T–278/U and terminals 3 and 4 of P501 supply those of the T–416/GR. The screen grid voltage to the power stages is controlled by the action of the TUNE-OPR switch (par. 48*e*).

55. Filament Voltage Distribution

(fig. 30)

Filament voltages are supplied to the tubes of the transmitter through terminals 1, 11, 12, 16, and 28 of P401 (P501). Terminal 1 supplies approximately 6 volts to the filaments of fifth doubler and driver V408 (V501) and power amplifiers V409 and V410 (V502). Only one of the oscillator tubes, V401 or V402, is supplied with 1.25 volts from either terminal 11 or 12, according to the position of the frequency selector switch on the control unit. Resistors R466 and R467 are connected across the filaments of audio tubes V403, V411, V412, and V413 to provide a hum-bucking network. They provide a center tap on the filament supply to which all grid and plate circuits are returned. This reduces any hum introduced into the circuit by fluctuations in filament voltage.

56. Grid Bias Distribution

Figure 31 illustrates grid bias distribution for Radio Transmitters T–278/U and T–416/GR. Grid bias voltage is supplied from an external power supply to terminal 6 of plug P401 (P501). A voltage divider and filter network in the transmitter distributes correct bias voltage to the tubes.

57. Control Circuits

(fig. 32 and 33)

The circuits of the transmitter are mainly controlled from other equipment. Subparagraphs *a*

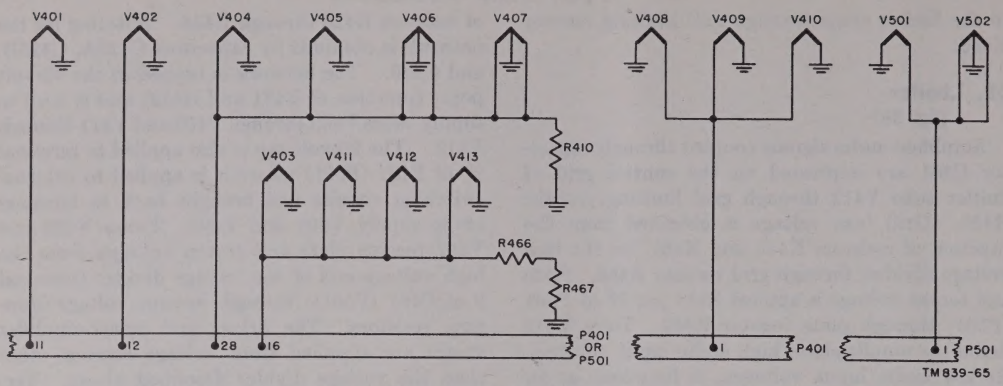

Figure 30. Radio Transmitters T–278/U and T–416/GR filament voltage distribution, simplified schematic.

through *c* contain a general description of how the various transmitter circuits are controlled. For a detailed analysis of the actions in the overall control circuit and its connections between the various units of the radio set in which the transmitter is used, refer to the system technical manuals. For the T–278/U, refer to TM 11–297. For the T–416/GR, refer to TM 11–226 or TM 11–252.

a. Main Power Switch. When the switch, on the control unit, that controls the main power to the radio set is placed in the ON position (VOLUME-OFF switch to the VOLUME position for the T–278/U; MAIN POWER switch to the ON position for the T–416/GR), a circuit in the transmitter power supply is completed which allows voltage to be applied to the crystal oven heater in the transmitter. The filament supply circuits in the power supply for the T–416/GR are also completed and the filaments of that transmitter are supplied with power. The filaments of the T–278/U are not directly controlled by the main power switch, as in the T–416/GR and, therefore, remain unlighted when main power is applied to the radio set. Plate, screen, and bias voltages are *not* applied to the transmitter by turning on the main power switch.

b. Push-To-Talk Switch. Pressing the push-to talk switch on the handset grounds the coil of the transmitting relay in the transmitter power supply. The relay is energized and in turn, through a set of contacts, completes the necessary circuits in the power supply to develop the plate, screen, and bias voltages for the transmitter. Another set of relay contacts completes the oscillator plate voltage circuit and applies plate voltage to the oscillator tubes in the transmitter. A third set of contacts completes the antenna relay supply circuit and allows current to flow in the antenna relay located in the transmitter. This energizes the relay that switches the antenna from the receiver to the transmitter and makes the transmitter ready for transmission. An additional set of contacts on the transmitting relay in the transmitter power supply for the T–278/U completes the filament supply circuit and allows filament voltage to be applied to the transmitter. The TEST-OFF switch on the transmitter is connected in parallel with the push-to-talk switch and, when placed in the TEST position, produces the same effects as pressing the push-to-talk switch.

c. Frequency Selector Switch. A lead from the filament supply is brought to the oscillator tubes in the transmitter through the frequency selector switch on the control unit. When the switch is in the frequency 1 position, filament voltage is applied to terminal 11 of P401 (P501). This allows the frequency 1 oscillator (V401) in the transmitter to function. When in the frequency 2 position, the switch applies filament voltage to terminal 12 of P401 (P501) and allows the frequency 2 (V402) oscillator to function.

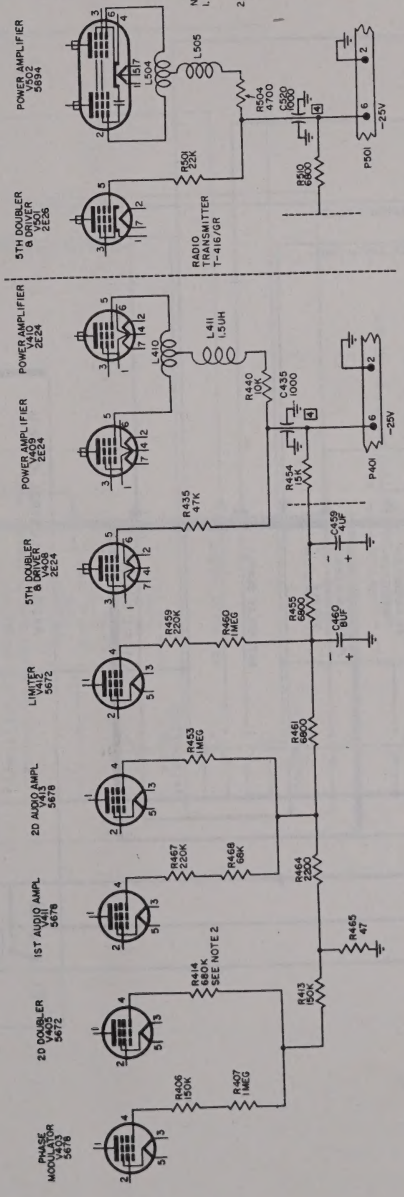

Figure 31. Radio Transmitters T-278/U and T-416/GR grid bias distribution, simplified schematic.

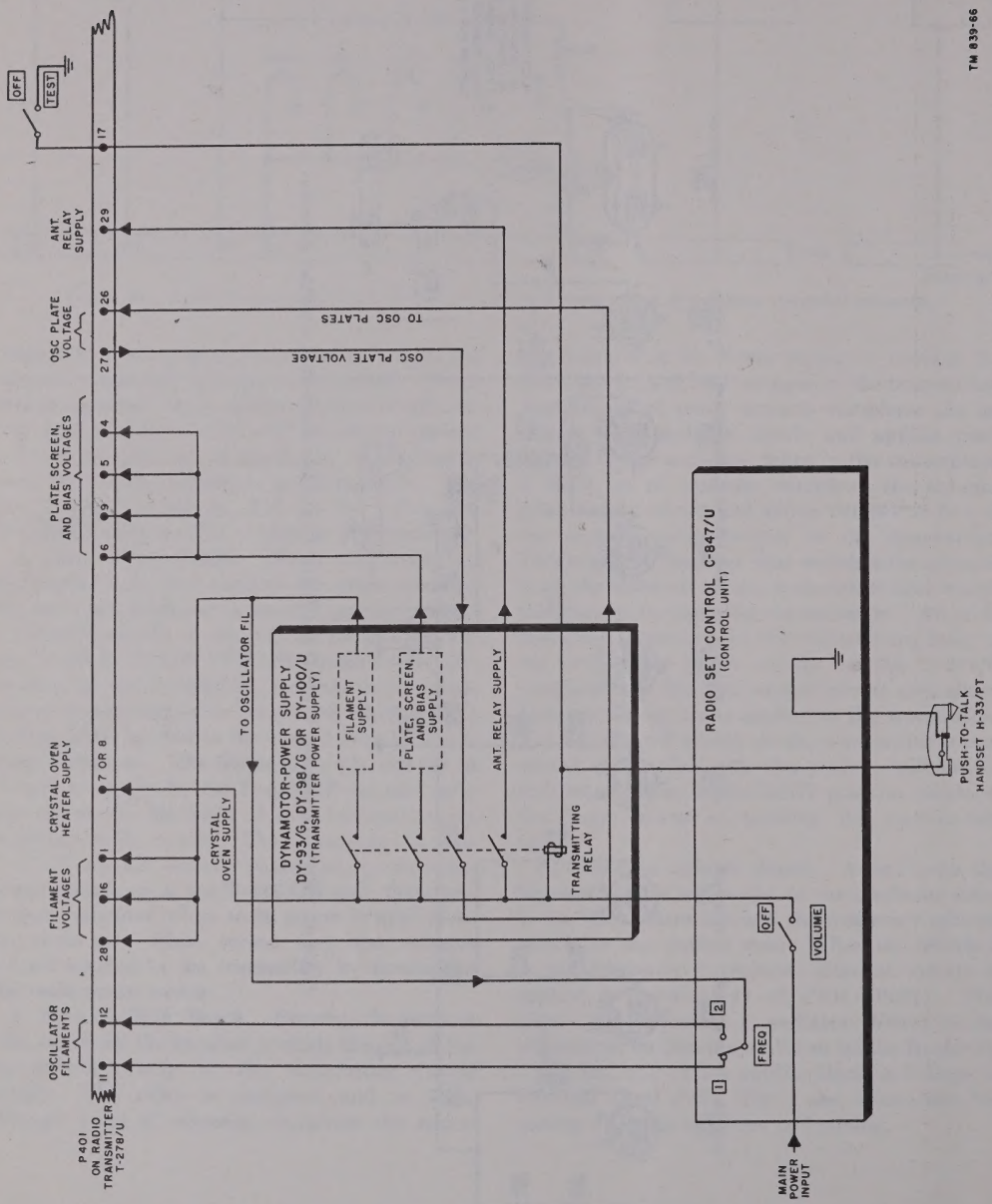

Figure 32. Radio Transmitter T-278/U, functional block diagram of control circuits.

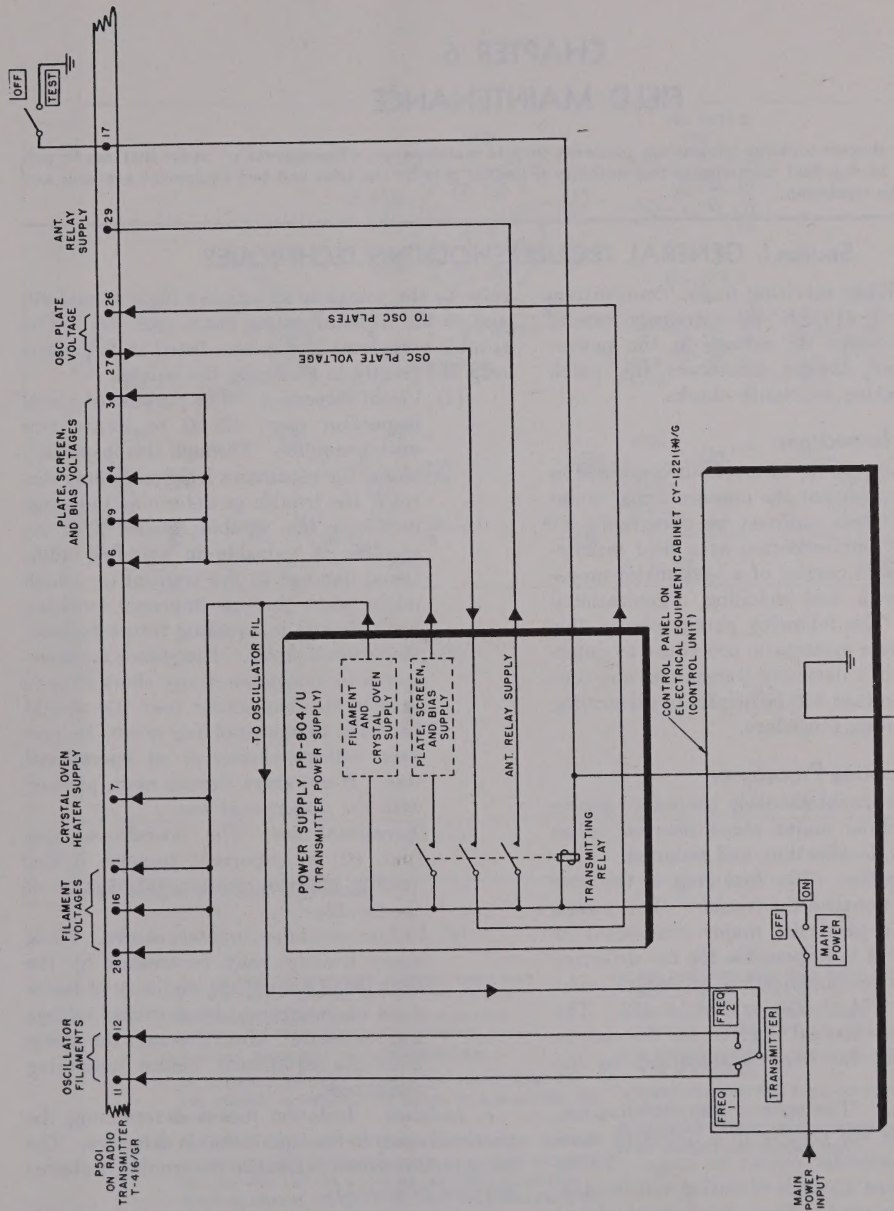

TM 839-67

Figure 33. Radio Transmitter T-416/GR, functional block diagram of control circuits

CHAPTER 6
FIELD MAINTENANCE

Note. This chapter contains information pertinent to field maintenance. The amount of repair that can be performed by units having field maintenance responsibility is limited only by the tools and test equipment available and by the skill of the repairman.

Section I. GENERAL TROUBLESHOOTING TECHNIQUES

Warning: When servicing Radio Transmitters T–278/U and T–416/GR be extremely careful because of the high dc voltage in the power-amplifier stage. Always disconnect the patch cord before making resistance checks.

58. Extent of Instructions

The field maintenance instructions contained in this chapter supplement the organizational maintenance instructions outlined in paragraphs 41 through 43. Troubleshooting at a field maintenance level should consist of a systematic procedure starting with, and including, organizational maintenance. The following paragraphs in this chapter describe a systematic procedure to determine the fault in a defective transmitter and contain information that will be helpful in performing the troubleshooting procedure.

59. Troubleshooting Procedures

A systematic troubleshooting procedure generally includes three major steps referred to as sectionalization, localization, and isolation.

a. Sectionalization. The first step in the procedure is to sectionalize the trouble. This means determining the particular major component or unit of a set that is responsible for the defective operation. For sectionalization procedure, refer to TM 11–297, TM 11–226, or TM 11–252. The procedure in this manual is given for the case in which a trouble has been sectionalized to the transmitter.

b. Localization. The second step, localization, means localizing the trouble in a defective component to a particular circuit or stage. To do this, four standard methods of testing and troubleshooting may be used. These methods are listed below and, for maximum effectiveness, should be performed in the order given. As symptoms of the trouble are noticed throughout the procedure, refer to the complete schematics (figs. 48 and 49) and to the troubleshooting chart (par. 64). The trouble symptoms and causes listed in this chart may aid greatly in localizing the trouble.

(1) *Visual inspection.* The purpose of visual inspection (par. 42) is to locate any visible trouble. Through this inspection alone, the repairman frequently may discover the trouble or determine the stage in which the trouble exists. This inspection is valuable in avoiding additional damage to the transmitter which might occur through improper servicing methods and in avoiding future failures.

(2) *Short-circuit checks.* Resistance measurements to determine if any short circuits exist in the transmitter (par. 61) should be made before applying power to perform voltage checks or an operational test. If not short circuits exist, proceed with the operational test.

(3) *Operational test.* The operational test (par. 62) is important because it frequently indicates the general location of the trouble.

(4) *Voltage, resistance, and tube checks.* While many troubles may be located by the tests listed above, the majority of faults must be determined by checking voltage and resistance. Always remove the power from the equipment before measuring resistances.

c. Isolation. Isolation means determining the particular part in the circuit that is defective. The same methods used to localize the trouble (*b* above) are used to isolate it.

d. Intermittents. An intermittent is a trouble that is not constantly evident. It may appear or disappear at any time. Sometimes, therefore, it is very difficult to repair this type of trouble. In

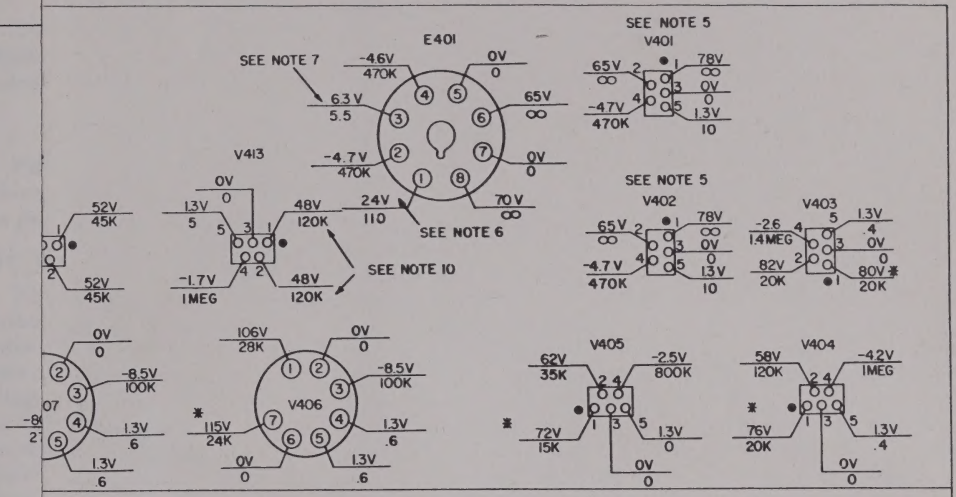

RADIO TRANSMITTER T-278/U OR T-416/GR
RIGHT SIDE

NOTES:

1. ALL VOLTAGE AND RESISTANCE READINGS TAKEN WITH VTVM BETWEEN TERMINAL AND CHASSIS GROUND.
2. RESISTANCE READING TAKEN WITH TRANSMITTER COMPLETELY DISCONNECTED FROM RADIO SET.
3. READINGS TAKEN WITH S401 IN OPR POSITION.
4. ON SUBMINIATURE TUBE SOCKETS, THE PIN CLOSEST TO THE RED DOT IS PIN 1. RED DOT SHOWN BY A BLACK DOT ON DRAWING.
5. FREQUENCY SELECTOR SWITCH ON CONTROL UNIT SHOULD BE SET AT FREQ 1 POSITION WHEN MEASURING VOLTAGES ON TUBE V401 AND PIN 4 OF E401; AT FREQ 2 POSITION WHEN MEASURING VOLTAGES ON TUBE V402 AND PIN 2 OF E401.
6. VOLTAGE AVAILABLE ONLY WHEN 24-VOLT CRYSTAL HEATER SUPPLY IS USED.
7. VOLTAGE AVAILABLE ONLY WHEN 6- OR 12-VOLT CRYSTAL HEATER SUPPLY IS USED.
8. * INDICATES READING SHOULD BE TAKEN AT TERMINAL 3 OF PLATE COIL.
9. RADIO TRANSMITTER T-416/GR VOLTAGE READINGS TAKEN WITH 115V AC INPUT.
10. READINGS DEPEND UPON POSITION OF R452.
11. NC INDICATES NO CONNECTION.

TM 839-73

328754 O - 55 (Face p. 44)

CHAPTER 6
FIELD MAINTENANCE

Note. This chapter contains information pertinent to field maintenance. The amount of repair that can be performed by units having field maintenance responsibility is limited only by the tools and test equipment available and by the skill of the repairman.

Section I. GENERAL TROUBLESHOOTING TECHNIQUES

Warning: When servicing Radio Transmitters T–278/U and T–416/GR be extremely careful because of the high dc voltage in the power-amplifier stage. Always disconnect the patch cord before making resistance checks.

58. Extent of Instructions

The field maintenance instructions contained in this chapter supplement the organizational maintenance instructions outlined in paragraphs 41 through 43. Troubleshooting at a field maintenance level should consist of a systematic procedure starting with, and including, organizational maintenance. The following paragraphs in this chapter describe a systematic procedure to determine the fault in a defective transmitter and contain information that will be helpful in performing the troubleshooting procedure.

59. Troubleshooting Procedures

A systematic troubleshooting procedure generally includes three major steps referred to as sectionalization, localization, and isolation.

a. Sectionalization. The first step in the procedure is to sectionalize the trouble. This means determining the particular major component or unit of a set that is responsible for the defective operation. For sectionalization procedure, refer to TM 11–297, TM 11–226, or TM 11–252. The procedure in this manual is given for the case in which a trouble has been sectionalized to the transmitter.

b. Localization. The second step, localization, means localizing the trouble in a defective component to a particular circuit or stage. To do this, four standard methods of testing and troubleshooting may be used. These methods are listed below and, for maximum effectiveness, should be performed in the order given. As symptoms of the trouble are noticed throughout the procedure, refer to the complete schematics (figs. 48 and 49) and to the troubleshooting chart (par. 64). The trouble symptoms and causes listed in this chart may aid greatly in localizing the trouble.

(1) *Visual inspection.* The purpose of visual inspection (par. 42) is to locate any visible trouble. Through this inspection alone, the repairman frequently may discover the trouble or determine the stage in which the trouble exists. This inspection is valuable in avoiding additional damage to the transmitter which might occur through improper servicing methods and in avoiding future failures.

(2) *Short-circuit checks.* Resistance measurements to determine if any short circuits exist in the transmitter (par. 61) should be made before applying power to perform voltage checks or an operational test. If not short circuits exist, proceed with the operational test.

(3) *Operational test.* The operational test (par. 62) is important because it frequently indicates the general location of the trouble.

(4) *Voltage, resistance, and tube checks.* While many troubles may be located by the tests listed above, the majority of faults must be determined by checking voltage and resistance. Always remove the power from the equipment before measuring resistances.

c. Isolation. Isolation means determining the particular part in the circuit that is defective. The same methods used to localize the trouble (*b* above) are used to isolate it.

d. Intermittents. An intermittent is a trouble that is not constantly evident. It may appear or disappear at any time. Sometimes, therefore, it is very difficult to repair this type of trouble. In

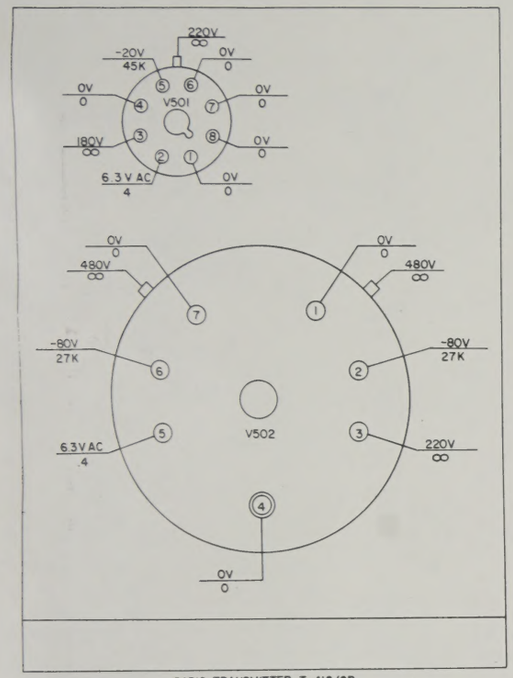

RADIO TRANSMITTER T-416/GR
FRONT

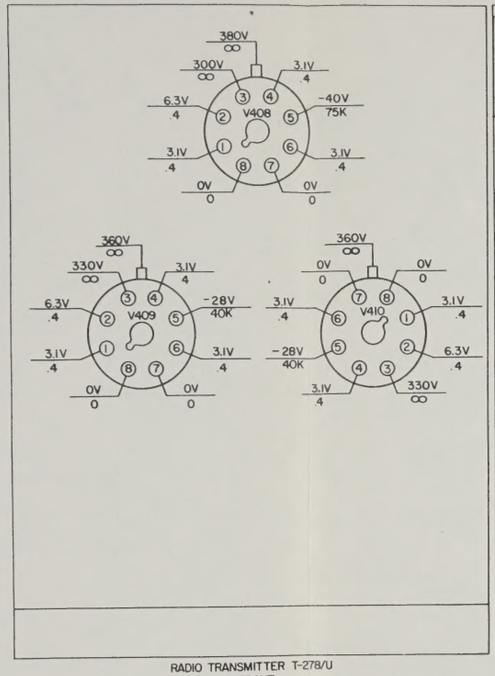

RADIO TRANSMITTER T-278/U
FRONT

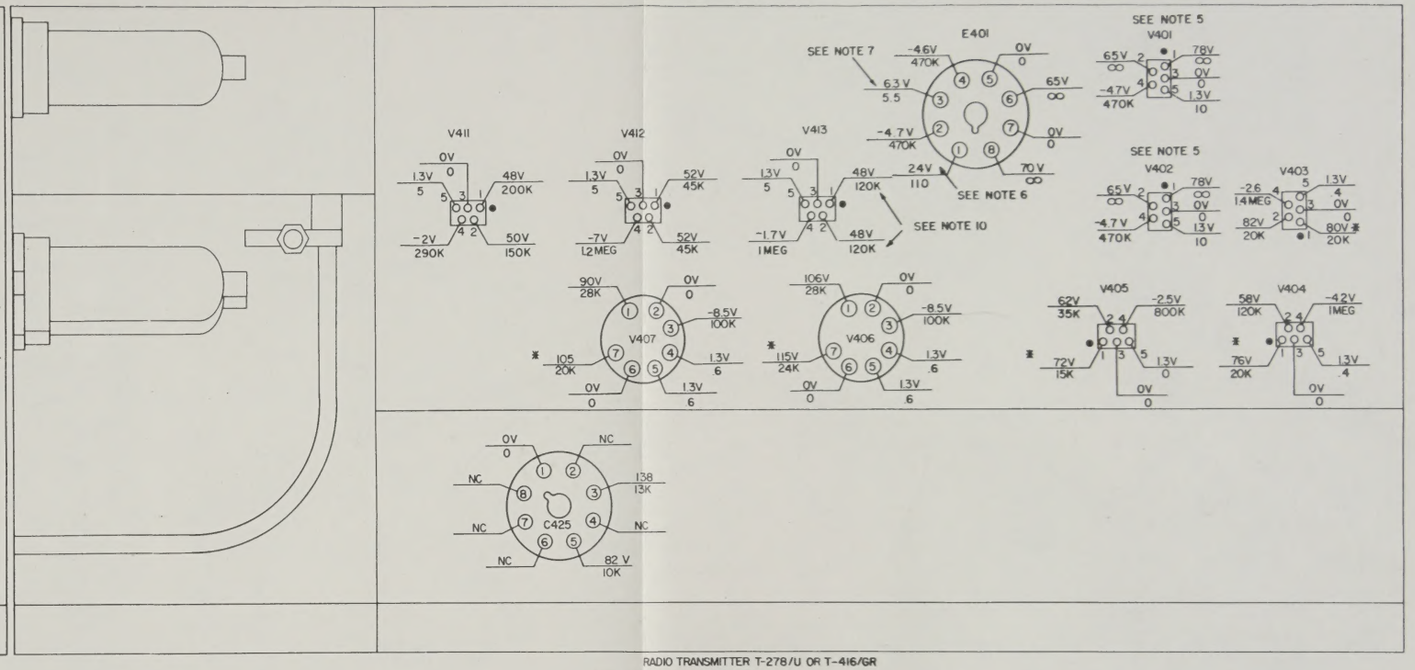

RADIO TRANSMITTER T-278/U OR T-416/GR
RIGHT SIDE

NOTES:

1. ALL VOLTAGE AND RESISTANCE READINGS TAKEN WITH VTVM BETWEEN TERMINAL AND CHASSIS GROUND.
2. RESISTANCE READING TAKEN WITH TRANSMITTER COMPLETELY DISCONNECTED FROM RADIO SET.
3. READINGS TAKEN WITH S401 IN OPR POSITION.
4. ON SUBMINIATURE TUBE SOCKETS, THE PIN CLOSEST TO THE RED DOT IS PIN 1. RED DOT SHOWN BY A BLACK DOT ON DRAWING.
5. FREQUENCY SELECTOR SWITCH ON CONTROL UNIT SHOULD BE SET AT FREQ 1 POSITION WHEN MEASURING VOLTAGES ON TUBE V401 AND PIN 4 OF E401; AT FREQ 2 POSITION WHEN MEASURING VOLTAGES ON TUBE V402 AND PIN 2 OF E401.
6. VOLTAGE AVAILABLE ONLY WHEN 24-VOLT CRYSTAL HEATER SUPPLY IS USED.
7. VOLTAGE AVAILABLE ONLY WHEN 6- OR 12-VOLT CRYSTAL HEATER SUPPLY IS USED.
8. * INDICATES READING SHOULD BE TAKEN AT TERMINAL 3 OF PLATE COIL.
9. RADIO TRANSMITTER T-416/GR VOLTAGE READINGS TAKEN WITH 115 V AC INPUT.
10. READINGS DEPEND UPON POSITION OF R452.
11. NC INDICATES NO CONNECTION.

TM 839-73

Figure 34. Radio Transmitters T-278/U and T-416/GR, voltage and resistance at tube socket terminals.

328754 O - 55 (Face p. 44)

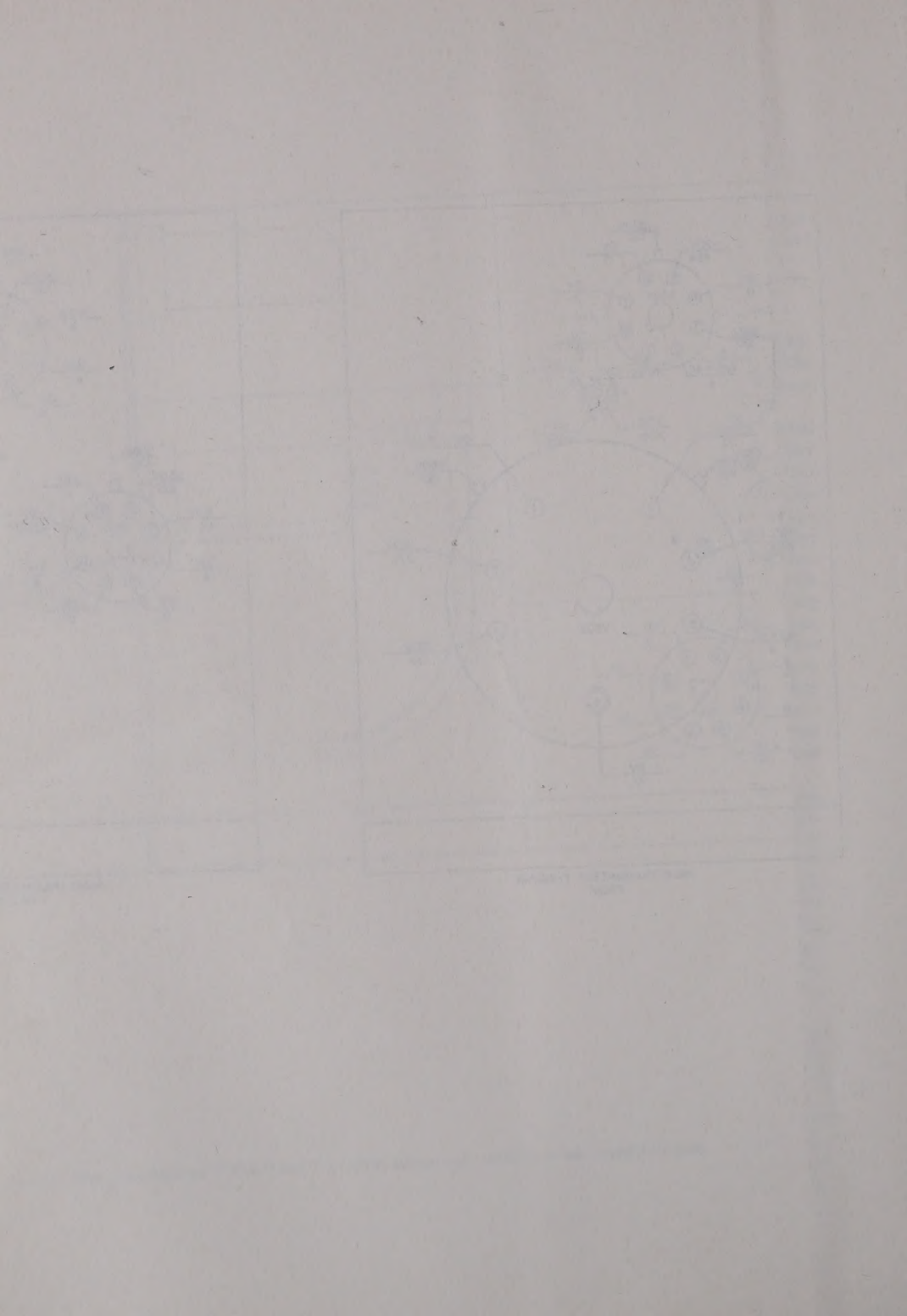

all these tests, the possibility of intermittents should not be overlooked. If the trouble is intermittent, it often may be made to appear by tapping or slightly jarring the set. *Do not tap the subminiature-type tubes.*

60. Test Equipment Required for Troubleshooting

The test equipment required for troubleshooting Radio Transmitters T–278/U and T–416/GR is listed below. The technical manuals associated with the test equipment are also listed where possible.

Test equipment	Technical manual
Electronic Multimeter TS–505/U, or equal.	TM 11–5511
Tube Tester I–177, or equal	TM 11–2627
Tube Socket Adapter Kit MX–949/U	TB 11–2627–2
Rf Wattmeter AN/URM–43.	

Section II. TROUBLESHOOTING RADIO TRANSMITTERS T–278/U and T–416/GR

Caution: Do not attempt the removal or replacement of parts before reading the instructions in paragraphs 66 and 67.

61. Checking B+ Circuits for Shorts

Figure 29 is a simplified diagram of the B+ distribution throughout the transmitter and the possible paths which could short circuit. By using this diagram along with the voltage and resistance diagrams (figs. 34 and 35) any short circuit existing in the B+ circuits of the transmitter can easily be determined. If resistance is very low as compared to that indicated in the voltage and resistance diagrams, do not operate the transmitter until the defect has been located and repaired. Damage to the power supply may result from attempting to operate the transmitter when a short circuit exists in the B+ circuits. Check for a shorted bypass capacitor in one of the plate or screen grid circuits or a short circuit in the wiring of one of the plate or screen grid circuits.

62. Operational Test

The operational test is used to check for the proper functioning of the transmitter. For this purpose, a dummy antenna (RF Wattmeter AN/URM–43) may be used instead of the regular transmitting antenna. Operate the transmitter as described in the equipment performance check list (par. 43). Check for all functions described in the *normal indications* column. Listen for crackling or buzzing noises which indicate high-voltage (hv) arcing. Check for smoke and the odor of burned or overheated parts.

63. Voltage, Resistance, and Tube Checks

a. Voltage measurements require that the transmitter be connected to a power source. This may be accomplished by connecting the equipment as outlined in paragraph 14. Resistance measurements should be taken with the transmitter completely disconnected from other equipment and all power removed. Figures 46 and 47 may be used as an aid in determining the value of components. All voltage and resistance readings should be taken with the common lead of Electronic Multimeter TS–505/U (or equal) connected to the transmitter chassis, the positive lead connected to the point being measured, and the meter set to a suitable range.

b. While voltage and resistance tests may be used to sectionalize and localize a trouble, they are particularly helpful in isolating a defective component when the trouble has been localized to a particular stage. The procedure outlined below describes a method of using voltage, resistance, and tube checks to isolate the defective component in a faulty stage or circuit.

(1) Test the .tube in the suspected stage. This may be done by using a tube tester (Tube Tester I–177 with Tube Socket Adapter Kit MX–949/U for subminiature tubes if necessary) or by substituting a similar tube known to be in normal operating condition.

(2) Take voltage measurements at the tube socket and available test points in the affected stage and compare them to the normal readings indicated in figures 34 and 35.

(3) If one or more voltage readings do not agree with those in the voltage and resistance diagrams, take resistance measurements to locate open or shorted circuits or defective components. Very low resistance readings, as compared to those of figures 34 and 35, generally indicate shorted capacitors or shorted wiring. Very high resistances generally indicate defective or open resistors or open cir-

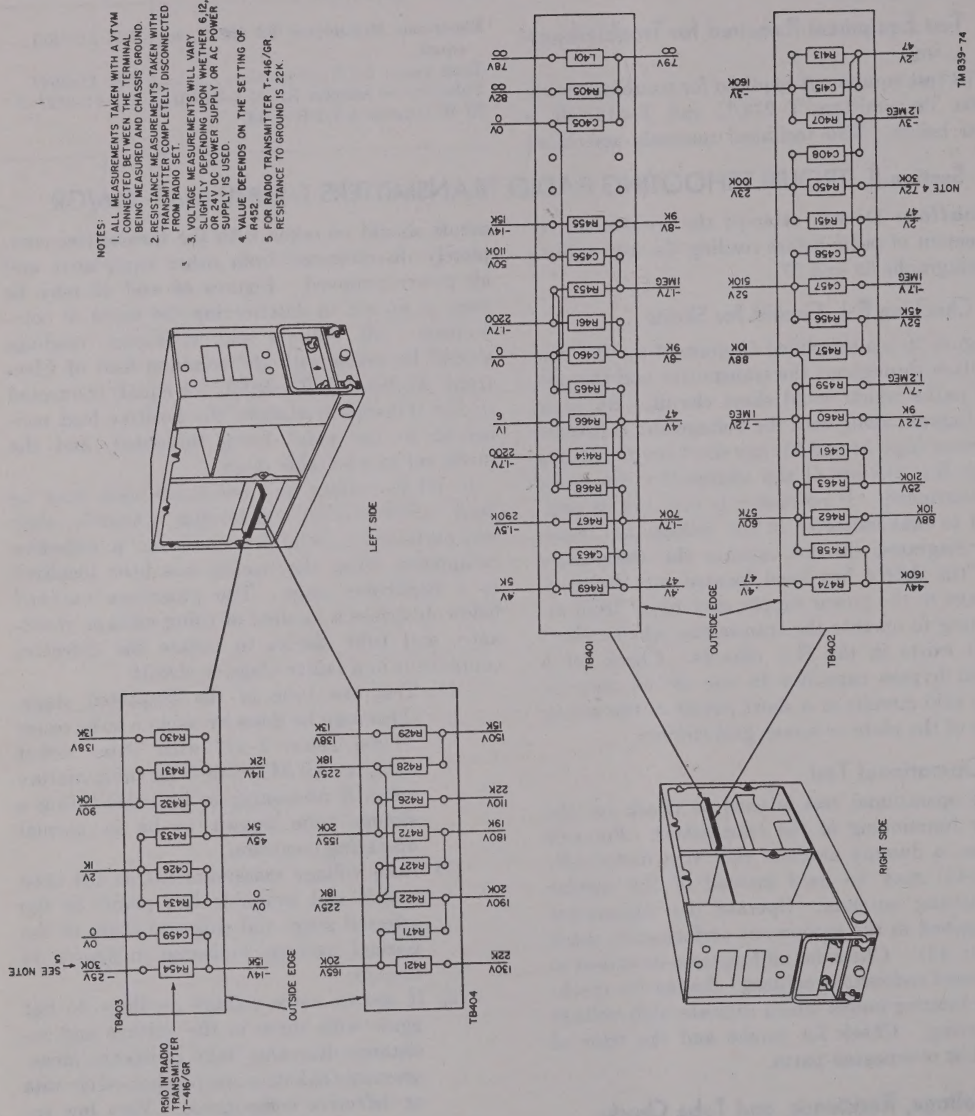
NOTES:
1. ALL MEASUREMENTS TAKEN WITH A VTVM CONNECTED BETWEEN THE TERMINAL BEING MEASURED AND CHASSIS GROUND.
2. RESISTANCE MEASUREMENTS TAKEN WITH TRANSMITTER COMPLETELY DISCONNECTED FROM RADIO SET.
3. VOLTAGE MEASUREMENTS WILL VARY SLIGHTLY DEPENDING UPON WHETHER 6,12, OR 24V DC POWER SUPPLY OR AC POWER SUPPLY IS USED.
4. VALUE DEPENDS ON THE SETTING OF R452.
5. FOR RADIO TRANSMITTER T-416/GR, RESISTANCE TO GROUND IS 22K.
LEFT SIDE
TB401
TB402
TB403
TB404
OUTSIDE EDGE
RIGHT SIDE
R50 IN RADIO TRANSMITTER T-416/GR
SEE NOTE 5
NOTE 4
TM839-74

Figure 35. Radio Transmitters T-278/U and T-416/GR, voltage and resistance at terminal boards.

cuits. Refer to paragraph 65 for the dc resistances of coils and windings.

64. Troubleshooting Chart

The following chart is supplied as an aid in locating trouble in the transmitter. Transmitter operation is dependent on all system components. For this reason, troubleshooting has been extended to cover possible faults in components external to the transmitter, and reference is made to the appropriate technical manuals for repair information. TM 11–297 should be referred to for system information involving the T–278/U. TM 11–5076, Dynamotor-Power Supplies DY–93/G, DY–98/G, and DY–100/U, should be referred to for information involving the transmitter power supply for the T–278/U. Refer to TM 11–226 or TM 11–252 for system information regarding the T–416/GR. For information regarding the transmitter power supply for the T–416/GR, refer to TM 11–5072, Power Supply PP–804/U. The simplified schematics for the B+, filament, and bias voltage distribution circuits (figs. 29, 30, and 31) should be used as an aid when isolating a defective component. Most of the reference symbols used in these schematics and in the chart are common to both the T–278/U and the T–416/GR. When the reference symbols in the two transmitters differ, both symbols are given. The symbol in parenthesis refers to the T–416/GR.

Symptom	Trouble	Correction
1. No power in transmitter	1. Defective system battery or power source.	1. Refer to appropriate radio set technical manual.
	Defective fuses in equipment cabinet or transmitter power supply.	
	Defective power switch on control unit.	
	Incorrect jumper connections in equipment cabinet.	
	Defective power relay in transmitter power supply (for T–278/U only).	
	Defective control cable (for T–278/U only).	
2. Crystal oven E401 does not heat (figs. 37 and 38).	2. Defective wiring from terminals 7 or 8 on P401 (P501).	2. Replace or repair wiring.
	Defective ground connection to terminal 7 of E401.	Repair.
	Defective thermostat or heating element in crystal oven.	Replace crystal oven.
	Defective system wiring from transmitter power supply to terminal 7 or 8 on P401 (P501).	Refer to technical manual for appropriate radio set.
	Defective crystal heater supply in transmitter power supply.	Refer to appropriate transmitter power supply technical manual.
3. No filament voltage for tube V401 or V402.	3. Defective wiring from terminal 11 or 12 of P401 (P501).	3. Repair or replace wiring.
	Defective tube (short-circuited filament).	Replace.
	Defective frequency selector switch on control unit	Refer to the technical manual for the appropriate radio set.
	Defective system wiring from transmitter power supply to terminal 11 or 12 on P401 (P501).	Refer to technical manual for appropriate radio set.
	Defective filament supply in transmitter power supply.	Refer to appropriate transmitter power supply technical manual.
4. No filament voltage for tubes V403 through V407 or V411 through V413.	4. Defective wiring from terminals 16 or 28 on P401 (P501).	4. Repair or replace wiring.
	Defective tube (short-circuited filament).	Replace defective tube.
	Defective system wiring from filament supply of transmitter power supply to terminal 16 or 28 on P401 (P501).	Refer to appropriate radio set technical manual.
	Defective filament supply in transmitter power supply.	Refer to appropriate transmitter power supply technical manual.

Symptom	Trouble	Correction
5. No filament voltage for tubes V408 (V501), V409, and V410 (V502).	5. Defective wiring from terminal 1 on P401 (P501).	5. Repair or replace wiring.
	Defective tube (short-circuited filament).	Replace defective tube.
	Shorted capacitor C432 in the T-278/U (fig. 39) or capacitor C511 in the T-416/GR (fig. 43).	Replace.
6. No plate or screen grid voltage on all tubes.	6. Defective B+ supply in transmitter power supply.	6. Refer to appropriate transmitter power supply technical manual.
	Defective TEST-OFF switch S401 (S502) or push-to-talk switch on handset.	Repair or replace.
7. No plate or screen grid voltage on tubes V401 and V402.	7. Defective wiring from terminal 26 on P401 (P501).	7. Repair or replace wiring.
	Open resistor R405 (fig. 35).	Replace.
	Shorted capacitor C405 (fig. 35).	Replace.
	Defective contacts on transmitting relay in transmitter power supply.	Refer to appropriate transmitter power supply technical manual.
8. No plate or screen grid voltage on tubes V403 through V405 and V411 through V413.	8. Open resistor in voltage divider network (R428, R429, R430, or R431) (fig. 35).	8. Replace defective resistor.
	Shorted section of capacitor C425 (fig. 38).	Replace capacitor.
9. Low screen grid voltage on tubes V408 (V501), V409 and V410 (V502).	9. Incorrect setting of TUNE-OPR switch S401 (S502) (figs. 39 and 43).	9. Place switch in OPR position.
	Defective switch S401 (S502).	Replace.
10. No screen grid voltage on tubes V408 through V410.	10. Defective wiring from terminal 5 of P401 (fig. 37).	10. Replace or repair wiring.
11. No screen grid voltage on tubes V501 and V502.	11. Open resistor R505 (fig. 43).	11. Replace.
12. No plate voltage on tubes V409 and V410 (V502).	12. Open resistor R446 (R509) (fig. 39 or 43).	12. Replace.
13. No plate or screen grid voltage on any one particular stage.	13. Open plate or screen grid resistor or shorted plate or screen grid capacitor in that particular stage.	13. Replace defective component.
14. No grid bias on tubes V403, V405, V411, V412, and V413. Low bias on tubes V408 (V501) V409, and V410 (V502).	14. Defective wiring from terminal 6 on P401 (P501).	14. Repair or replace wiring.
	Defective bias supply in transmitter power supply.	Refer to appropriate transmitter power supply technical manual.
15. No bias on tubes V403, V405, V411, V412, and V413.	15. Capacitor C459 or C460 shorted (fig. 35).	15. Replace.
	Resistor R455 open (fig. 35).	Replace.
16. No grid bias on tubes V403, V405, V411, and V413. High bias on tube V412.	16. Resistor R461 open (fig. 35).	16. Replace.
17. No grid bias on tubes V403 and V405. High bias on tubes V411, V412, and V413.	17. Resistor R464 open (fig. 35).	17. Replace.
18. Excessive bias on tubes V403, V405, V411, V412, and V413.	18. Resistor R465 open (fig. 35).	18. Replace.
19. No current in handset microphone.	19. Open resistor in voltage divider network (R432, R433, or R434) (fig. 35).	19. Replace defective component
	Note. In Radio Transmitters T-278/U serial numbered 600 or below, an open resistor R434 is not a possible trouble.	

Symptom	Trouble	Correction
20. Low or no grid drive to tube V411.	20. Defective handset.	20. Replace.
	Open winding in transformer T401 (figs. 36 and 38).	Replace.
	Open limiting resistor R467 (fig. 35).	Replace.
	Resistor R469 shorted (fig. 35).	Replace.
21. No output from tube V413 to phase modulator.	21. Defective tube (V411, V412, or V413) (fig. 4).	21. Replace defective tube.
	Defective coupling capacitor C461 or C457 or defective limiting resistor R459 (fig. 35).	Replace defective component.
	Shorted capacitor C458 (fig. 35)	Replace.
	Shorted feedback capacitor C456 (fig. 35)	Replace.
	Faulty DEVIATION LEVEL control R452 (figs. 36 and 38).	Replace.
	Open resistor R450 or capacitor C408 (fig. 35).	Replace defective component.
22. Oscillator stage does not tune.	22. Defective tube.	22. Replace.
	Defective crystal.	Replace.
	Shorted plates on grid tuning capacitor.	Separate plates or replace component.
	Open resistor or coil in plate or screen grid circuit.	Locate and replace defective component.
	Shorted plate or screen grid bypass capacitor.	Replace defective component.
23. One of the rf stages V403, through V407, V408 (V501), or V409 and V410 (V502), fails to tune.	23. Defective tube.	23. Replace.
	No drive from previous stage.	Retune previous stage.
	Defective tuning coil.	Replace.
	Open resistor or coil in plate or screen grid circuit.	Replace defective component.
	Shorted plate or screen grid bypass capacitor.	Replace defective component.
	Defective coupling capacitor or transformer.	Replace defective component.
24. Low or no rf output from transmitter.	24. Weak output tubes V409 and V410 (V502) (figs. 36 and 41).	24. Replace.
	TUNE-OPR switch in TUNE position (figs. 39 and 43).	Place in OPR position.
	Defective ANT TUNE capacitor C451 (C517) (figs. 38 and 42).	Replace.
	Defective antenna coupling coil L412 (L507) (figs. 38 and 42).	Replace.
	Open coil or shorted capacitor in antenna filter Z407 (fig. 40).	Replace defective component.
	Defective contacts on antenna relay K401 (fig. 37).	Repair and adjust.
	Defective antenna connector P403.	Replace.
25. Antenna relay (K401) does not operate.	25. Open winding in relay coil.	25. Replace relay.
	Defective contacts on relay.	Repair and adjust or replace relay.
	Defective antenna relay supply in transmitter power supply.	Refer to the appropriate transmitter power supply technical manual.

65. Dc Resistance of Transformers and Coils

The dc resistance of the transformer windings and the coils of Radio Transmitters T–278/U and T–416/GR are listed in the chart below. The component is listed in the *transformer or coil* column and, when necessary, the particular terminals of the component that the resistance is measured across are listed in the *terminal* column. The normal resistance value is shown in the *ohms* column.

Transformer or coil	Terminals	Ohms	Transformer or coil	Terminals	Ohms
T401	1 to 2	75	L408		(1)
	1 to 3	150	L409		(1)
	2 to 3	75	L410		(1)
	4 to 5	5000	L411		(1)
K401		52	L412		(1)
L401		25	L413		(1)
L402	1 to 3	1.1	L414		(1)
L403	1 to 3	1.1	L501		(1)
L404	1 to 3	.33	L502		(1)
L405	1 to 3	(1)	L503		(1)
Z405	1 to 3	(1)	L504		(1)
L406		(1)	L505		(1)
L407		(1)	L507		(1)

[1] Less than 0.1.

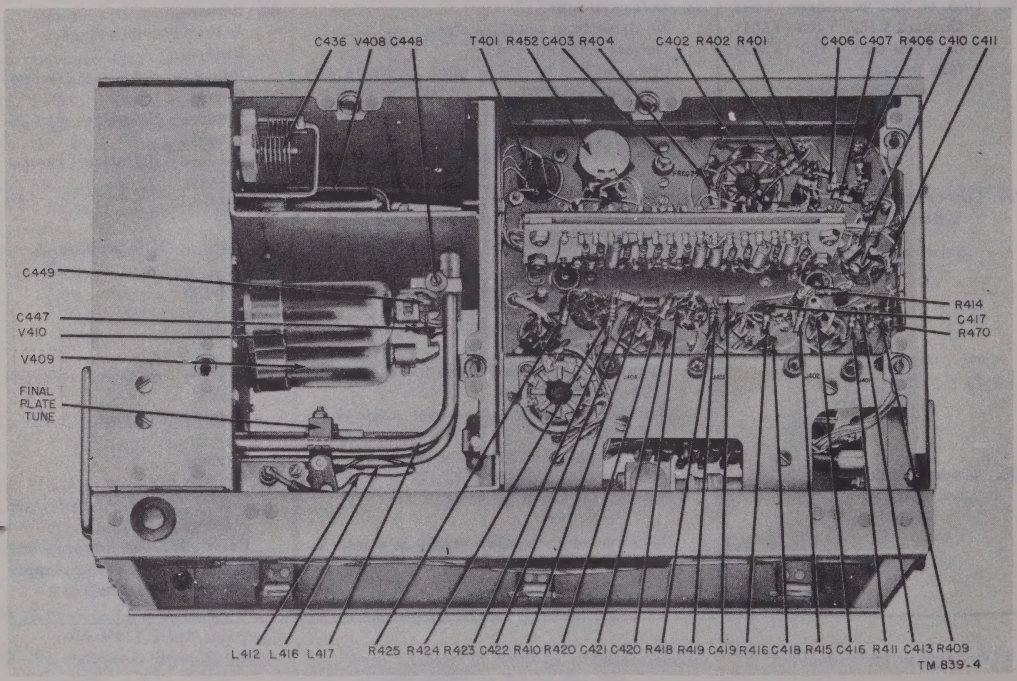

Figure 36. Radio Transmitter T–278/U, bottom right side view.

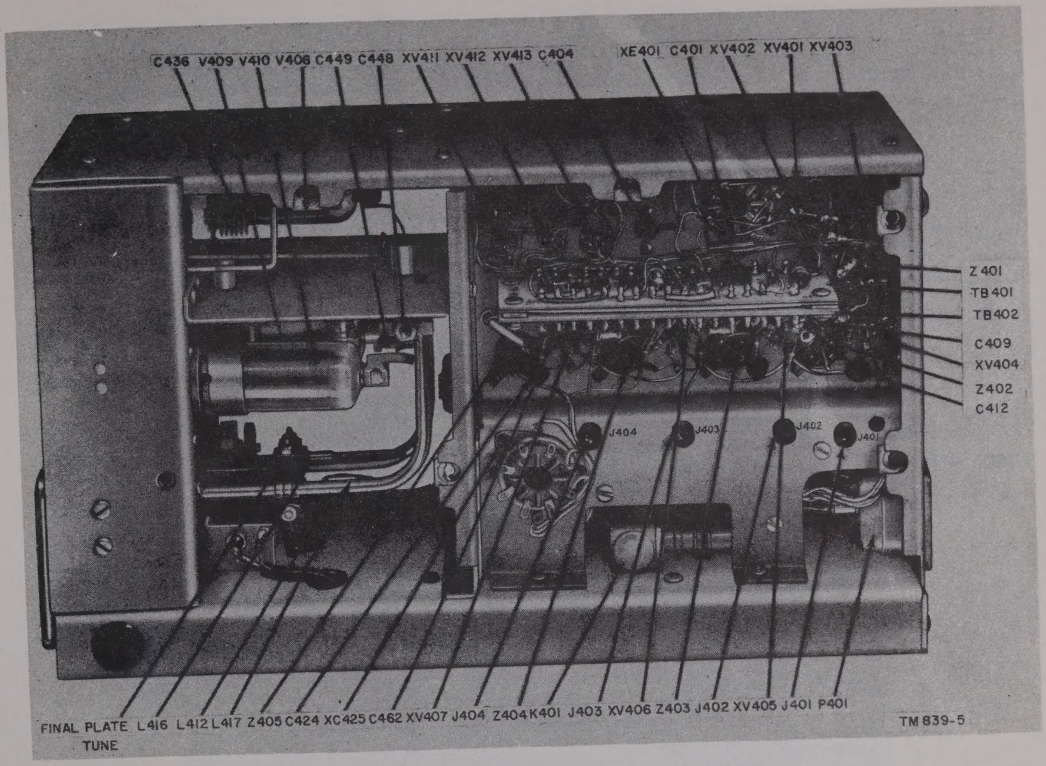

Figure 37. Radio Transmitter T-278/U, top right side view.

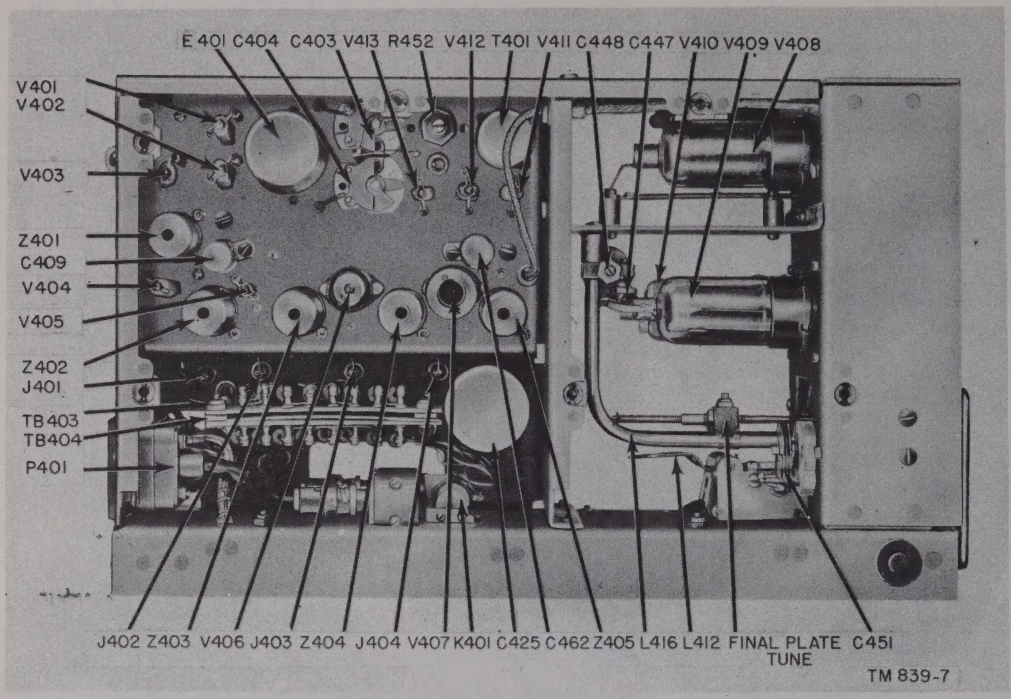

Figure 38. Radio Transmitter T-278/U, left side view.

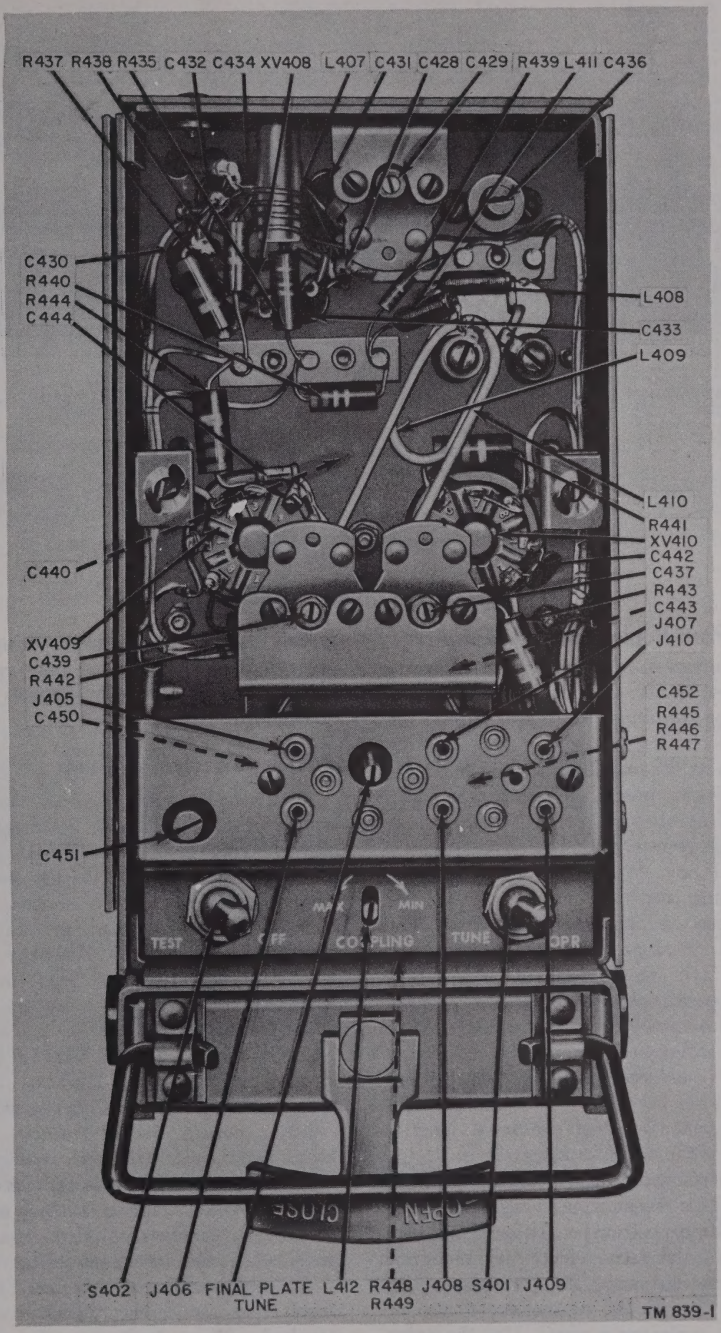

Figure 39. Radio Transmitter T–278/U, front view.

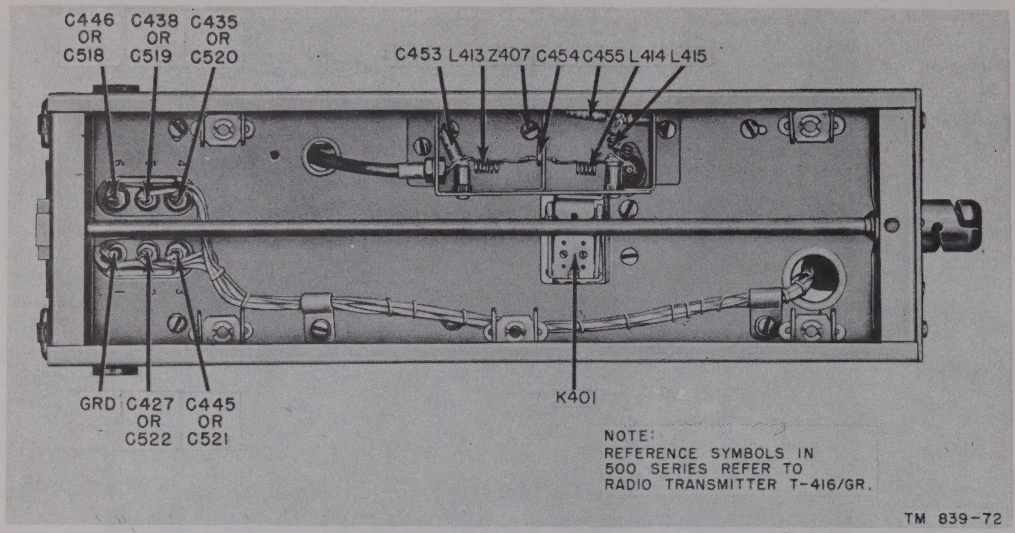

Figure 40. Radio Transmitters T-278/U and T-416/GR, bottom view.

Section III. REPAIRS

66. General Parts-Replacement Techniques

Careless replacement of parts in the transmitter often causes new faults. When replacing parts in the transmitter observe the precautions and techniques listed below.

a. Before a part is unsoldered, note the position of the leads. If the part, such as a transformer or filter, has a number of connections, tag each lead to show the proper point of connection.

b. Be careful not to damage other leads by pulling or pushing them out of the way.

c. Do not use a large soldering iron when soldering small resistors or ceramic capacitors. Overheating of the small parts may damage or change the value of the component.

d. Do not allow drops of solder to fall into the set since they may cause short circuits.

e. A carelessly soldered connection may create a new fault. It is very important to make well-soldered joints, since a poorly soldered joint is one of the most difficult faults to locate.

f. When a part is replaced in vhf circuits, such as those used in this transmitter, it must be placed in exactly the same position as the original part. A part that has the same electrical value but different physical size may cause trouble in vhf circuits. Give particular attention to proper grounding when replacing a part. Use the same ground as in the original wiring. Failure to observe these precautions may result in loss of oscillation, decreased output, or parasitic oscillations.

67. Replacement of Tubes

a. Power-Amplifier Tube. The 5894 power-amplifier tube in Radio Transmitter T-416/GR may be removed by first loosening the setscrews holding the plate leads to the plate terminals of the tube. This may be done with one of the Allen wrenches attached to the inside of the right-hand dust cover. When the setscrews have been loosened, the plate leads may be removed from the tube terminals and the tube may be lifted from its socket.

b. Subminiature-Type Tubes. To remove a subminiature-type tube, lift the hold-down clip away from the tube and *very gently* lift the tube from its socket. *When replacing these tubes, the red dot on the side of the tube, indicating pin No. 1, must be located next to the red dot painted on the socket.* Severe damage to the tube may result from installing it backwards. Underneath the chassis, pin No. 1 is the pin closest to the red dot painted on the chassis. Pins 2, 3, 4, and 5 follow in order. Replacement tubes are furnished with long leads attached. These leads must be cut to a length

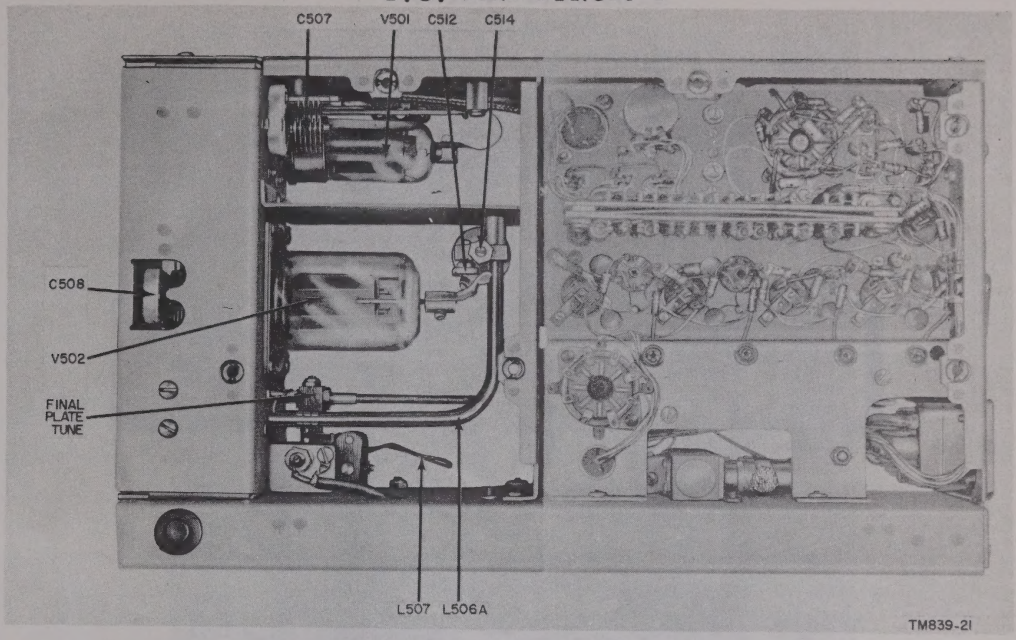

Figure 41. Radio Transmitter T-416/GR, right side view.

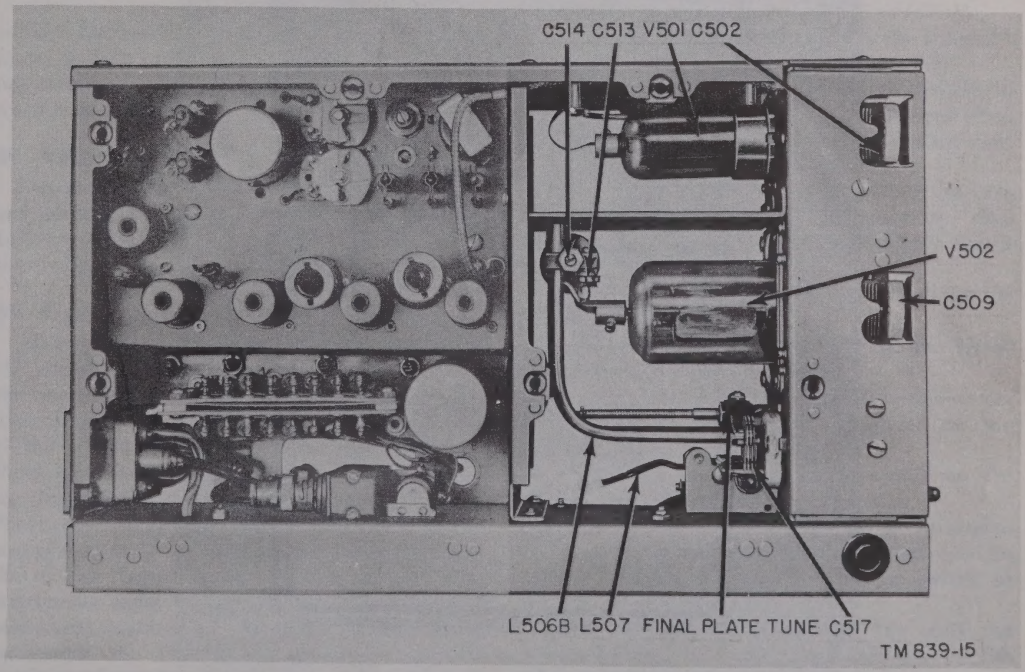

Figure 42. Radio Transmitter T-416/GR, left side view.

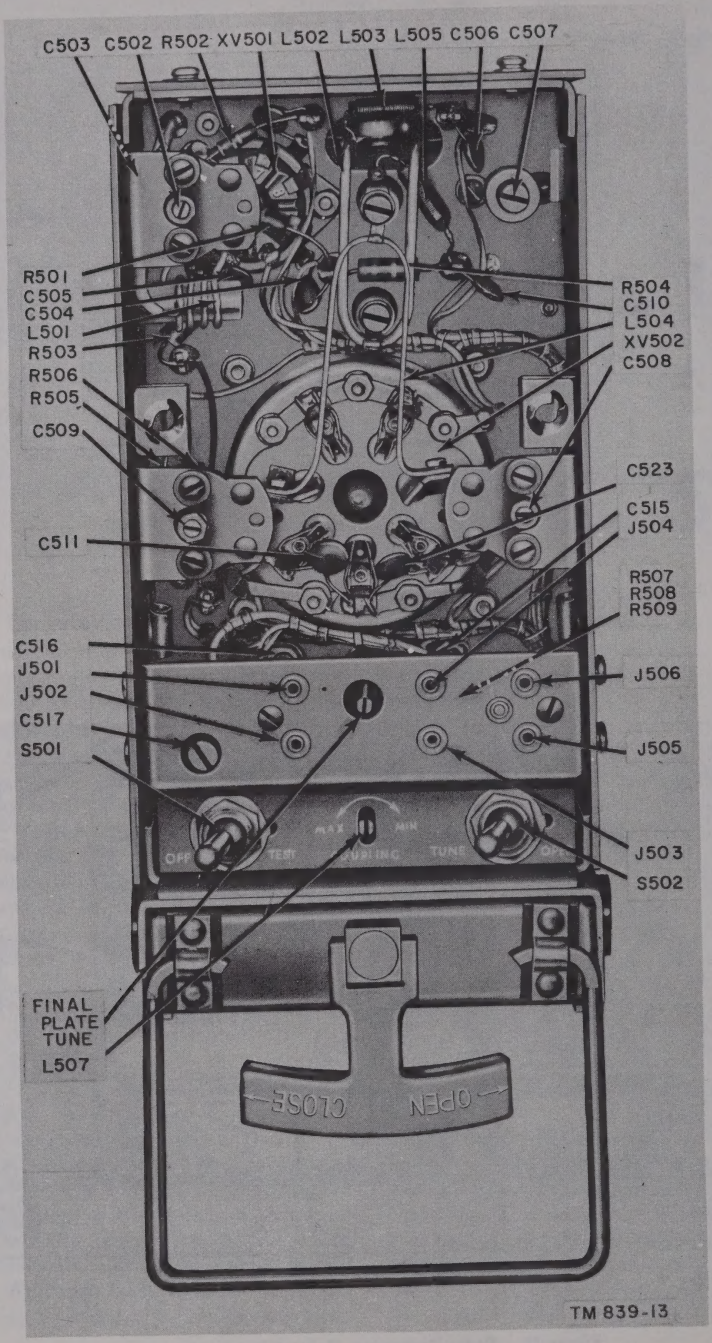

Figure 43. Radio Transmitter T-416/GR, front view.

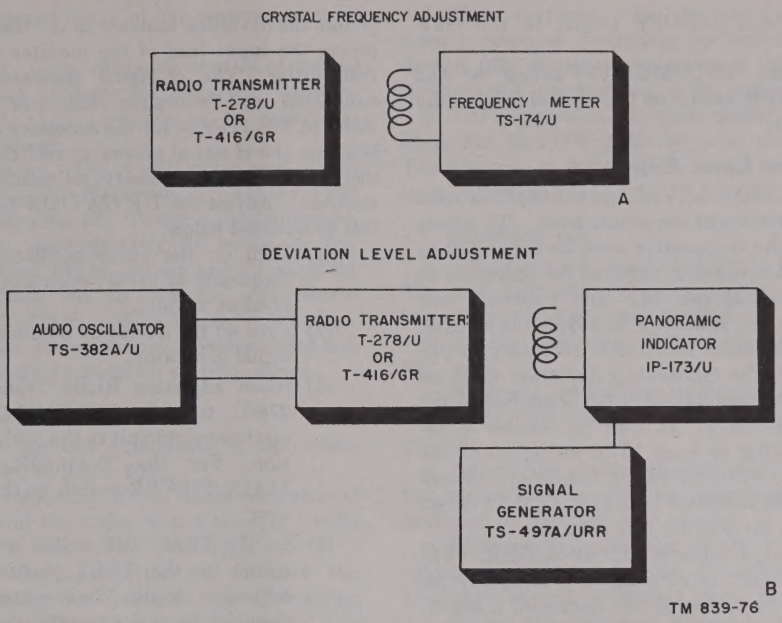

Figure 44. Radio Transmitters T–278/U and T–416/GR, adjustment block diagrams.

suitable for insertion in the tube socket. Cut the leads carefully with *sharp* diagonal cutters. Do not exert any pulling pressure on the tube leads when cutting them.

68. Refinishing

Instructions for refinishing badly marred panels and surfaces are given in TM 9–2851, Painting Instructions for Field Use. Refer to these instructions when necessary.

69. Crystal Frequency Adjustment

After tuning the transmitter (pars. 16 through 18), it may be necessary to adjust the oscillators to the exact desired operating frequencies. Variable capacitors C403 and C404 allow slight adjustment of the crystal operating frequencies. To adjust these capacitors to obtain the exact desired operating frequencies, a frequency standard such as Frequency Meter TS–174B/U (TM 11–5044), or equivalent, must be used to accurately indicate the output frequencies of the transmitter. The transmitter must be connected to all additional equipment required for operation as outlined in paragraph 14. Follow the procedure outlined below to adjust the capacitors.

a. Connect the test equipment to the transmitter as shown in block diagram, figure 44 Ⓐ.

b. Adjust the frequency standard to the desired operating frequency that is to be obtained when the frequency selector switch on the control unit is in the frequency 1 position.

c. Turn the VOLUME-OFF switch on the control unit toward a VOLUME position. (For the T–416/GR place the MAIN POWER switch in the ON position.)

d. Turn the frequency selector switch to the frequency 1 position.

e. Turn the TEST-OFF switch on the transmitter to the TEST position.

f. Adjust capacitor C403 (fig. 10) until the correct transmitter frequency is indicated on the frequency standard.

g. Turn the frequency selector switch on the control unit to the frequency 2 position.

h. Adjust the frequency standard to the alternate transmitter operating frequency that is to be obtained with the frequency selector switch in the frequency 2 position.

i. Adjust capacitor C404 (fig. 10) until the correct transmitter frequency is indicated on the frequency standard.

j. Turn the TEST-OFF switch to the OFF position.

k. Turn the VOLUME-OFF switch or the MAIN POWER switch on the control unit to the OFF position.

70. Deviation Level Adjustment

a. DEVIATION LEVEL control R452 is used to set the deviation at the proper level. To adjust the control, the transmitter must be connected to all additional equipment required for operation as outlined in paragraph 14. The following test equipment is also necessary to adjust the control.

(1) A deviation monitor is necessary to observe the transmitter deviation when an audio modulating signal is applied to the transmitter. It must be capable of indicating at least 15-kc deviation at the transmitter operating frequency. Panoramic Indicator IP–173/U (TM 11–5086) may be used for this purpose.

(2) Signal Generator TS–497A/URR (TM 11–5030), or equivalent, is necessary for the operation of the deviation monitor.

(3) Audio Oscillator TS–382A/U (TM 11–2684A), or equivalent, is needed to supply an audio modulating signal to the transmitter.

b. Connect the test equipment to the transmitter as shown in block diagram B, figure 44. The audio oscillator output must be applied across the 600-ohm audio input terminals of the transmitter. To do this, connect the audio oscillator to terminals 9 and 10 of terminal board TB801 in Electrical Equipment Cabinet CY–938(*)/VRC (for the T–278/U) or to terminals 5 and 10 of terminal board TB1902 in Electrical Equipment Cabinet CY–1221(*)/G (for the T-416/GR). Inductively couple the deviation monitor to the transmitter by laying the input lead of the monitor next to the transmitter. The rf signal generator must be connected to Panoramic Indicator IP–173/U. Refer to TM 11–5086 for the necessary connections between the rf signal generator and the deviation monitor and the necessary adjustments to the monitor. Adjust the DEVIATION LEVEL control as outlined below.

(1) Turn on the audio oscillator. Set the frequency at 1,000 cycles and the output level at .2 volts.

(2) Turn on the deviation monitor and the rf signal generator.

(3) When adjusting Radio Transmitter T–278/U, turn the VOLUME-OFF switch on the control unit to the VOLUME position. For the T–416/GR, turn the MAIN POWER switch to the ON position.

(4) Set the TEST-OFF switch on the transmitter to the TEST position. (When adjusting Radio Transmitter T–278/U powered by a dynamotor-power supply, do not keep the TEST-OFF switch in the TEST position for more than 3 minutes at a time. Allow a 12-minute rest period after each 3 minutes of operation.)

(5) Determine the deviation indicated on the deviation monitor.

(6) Adjust the DEVIATION LEVEL control R452 (fig. 10) on the transmitter until the deviation monitor indicates 15-kc deviation.

(7) Turn the TEST-OFF switch on the transmitter to the OFF position and remove all power from the equipment.

Section IV. FINAL TESTING

71. Purpose

This section is intended as a guide to be used in determining the quality of repaired Radio Transmitters T–278/U and T–416/GR. The tests for minimum performance standards (pars. 73 through 76) may be performed by maintenance personnel with adequate test equipment and the necessary skills. The transmitter must be operated with additional equipment connected as outlined in paragraph 14. Repaired equipment meeting these requirements will furnish uniformly satisfactory operation.

72. Test Equipment Required for Final Testing

In addition to the test equipment listed in paragraph 70, the following items are required for final testing.

a. Distortion Analyzer. Measurements for distortion should be made with Spectrum Analyzer TS–723/U, or an equivalent unit.

b. Test Receiver. The test receiver should be capable of tuning to 160 mc. The audio distortion introduced by this test receiver should be not more than 4 per cent at the audio level for testing. The

frequency response curve of the receiver must be known.

c. Voltmeter. Two voltmeters capable of reading audio frequency voltages are required. Multimeter TS–352/U (TM 11–5527), or an equivalent meter may be used.

d. Rf Wattmeter. The rf wattmeter used should be Radio Frequency Wattmeter TS–118/AP (TM 11–1036), or equivalent. Power output measurements will be approximately 25 watts for frequencies between 152 to 162 mc and 20 watts for frequencies from 162 to 174 mc with Radio Transmitter T–278/U. With Radio Transmitter T–416/GR, the power output measurements will be approximately 45 watts on all frequencies.

73. Deviation Limit Test

a. Connect the test equipment to the transmitter as shown in figure 45Ⓐ.

b. Set the frequency of the audio oscillator at 1,000 cycles and the audio output level at 5 volts as indicated on Multimeter TS–352/U.

c. Operate the transmitter and observe the modulation deviation indicated on Panoramic Indicator IP–173/U. The deviation should not exceed 15 kc.

74. Overall Audio Response Test

a. Connect the equipment as shown in figure 45Ⓑ. The audio oscillator is connected to the 600-ohm audio input terminals of the transmitter (par. 70*b*).

b. Adjust the audio input to 40 millivolts (mv) at 1,000 cycles.

c. With the transmitter operating on 160 mc, adjust the test receiver to the transmitter frequency.

d. Record the voltage at the audio output of the test receiver.

e. Repeat this measurement with the audio input at 100, 200, 400, 2,000, and 3,500 cycles; hold the audio input to the transmitter constant at 40 mv.

f. Make corrections for the test receiver frequency response (including correction for a 6-decibel (db) rising characteristic if this compensation is not incorporated in the test receiver).

g. The response at 100 cycles should not depart from that at 1,000 cycles by more than ±1 db. The response at 3,500 cycles should be down not more than 4 db.

75. Distortion Test

a. Set up the equipment as shown in figure 45Ⓒ. The distortion analyzer is connected across the test receiver audio output terminals.

b. Set the frequency of the audio oscillator at 800 cycles.

c. With the transmitter operating at 160 mc, adjust the test receiver to the transmitter frequency.

d. Adjust the audio oscillator output level to the transmitter to give an indication of 12-kc deviation on the deviation monitor.

e. Measure the distortion at the test receiver output, as indicated by the distortion analyzer. This value should not exceed 10 per cent.

f. Repeat the distortion measurement at audio input frequencies of 2,000 and 3,500 cycles; hold the transmitter deviation constant at 12 kc. Distortion should not exceed 10 per cent.

76. Power Output Test

a. Tune the transmitter (pars. 16 through 18) for an operating frequency of 152 mc.

b. Connect the rf wattmeter to the antenna terminal on the equipment cabinet.

c. Operate the transmitter and observe the power output indicated on the wattmeter. It should be at least 25 watts for the T–278/U and 45 watts for the T–416/GR.

d. Tune the transmitter to 170 mc.

e. Operate the transmitter and observe the power output indicated on the wattmeter. It should be at least 20 watts for the T–278/U and 45 watts for the T–416/GR.

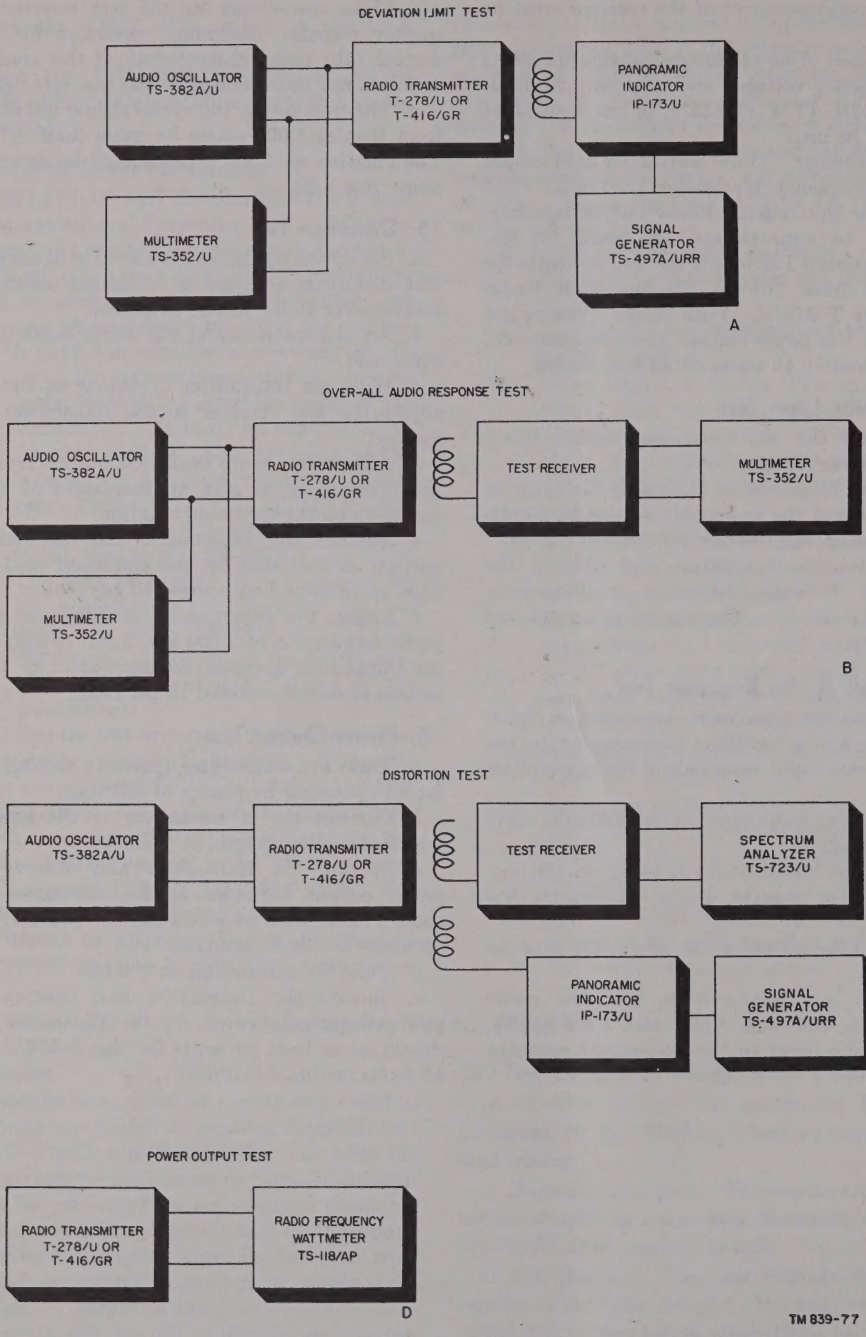

Figure 45. Radio Transmitters T-278/U and T-416/GR, final test, block diagrams.

CHAPTER 7

SHIPMENT AND LIMITED STORAGE AND DEMOLITION TO PREVENT ENEMY USE

Section I. SHIPMENT AND LIMITED STORAGE

77. Disassembly

Radio Transmitters T–278/U and T–416/GR are plug-in units normally stored and transported in Electrical Equipment Cabinet CY–938(*)/VRC and Electrical Equipment Cabinet CY–1221(*)/G. To separate the transmitter from the system in which it operates, it is necessary only to remove it from the equipment cabinet.

78. Repacking for Shipment or Limited Storage

a. The exact procedure in repacking for shipment or limited storage depends on the material available and the conditions under which the equipment is to be shipped or stored. Normally, the transmitter will be housed in Electrical Equipment Cabinet CY–938(*)/VRC or Electrical Equipment Cabinet CY–1221(*)/G for storage.

b. When repacking the equipment, it should be inclosed in a protected carton placed within a wooden case. Whenever practicable, place a dehydrating agent, such as silica gel, inside the inner carton. Protect the inner carton with a waterproof paper barrier. Seal the seams of the paper barrier with waterproof sealing compound or tape. Pack the protected carton in a padded wooden case; provide at least 3 inches of excelsior padding between the paper barrier and the packing case.

Section II. DEMOLITION OF MATERIEL TO PREVENT ENEMY USE

79. General

The demolition procedures outlined in paragraph 80 will be used to prevent the enemy from using or salvaging this equipment. Demolition of the equipment will be accomplished only upon the order of the commander.

80. Methods of Destruction

a. Smash. Smash the crystals, controls, tubes, coils, switches, capacitors, and transformers; use sledges, axes, handaxes, hammers, crowbars, or other heavy tools.

b. Cut. Cut cords and wiring; use axes, handaxes, or machetes.

c. Burn. Burn cords, resistors, capacitors, coils, wiring, and technical manuals; use gasoline, kerosene, oil, flame throwers, or incendiary grenades.

d. Bend. Bend panels, cabinet, and chassis.

e. Explode. If explosives are necessary, use firearms, grenades, or TNT.

f. Dispose. Bury or scatter the destroyed parts in slit trenches, fox holes, or other holes, or throw them into streams.

g. Destroy. Destroy everything.

RESISTOR COLOR CODE MARKING

(MIL-STD RESISTORS)

AXIAL-LEAD RESISTORS (INSULATED)

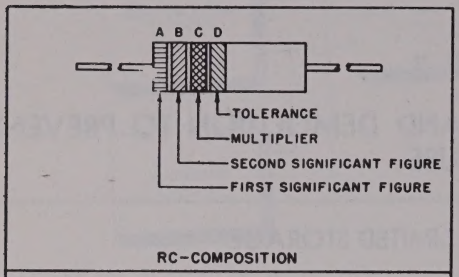

RC-COMPOSITION

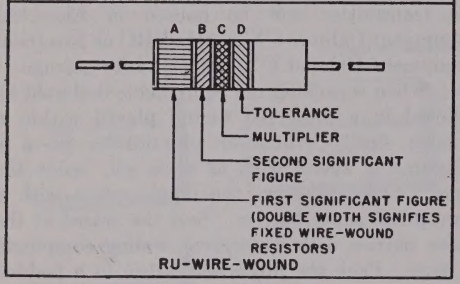

RU-WIRE-WOUND

RADIAL-LEAD RESISTORS (UNINSULATED)

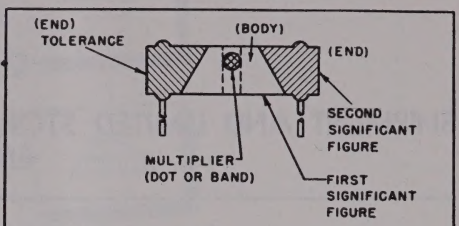

RZ-COMPOSITION

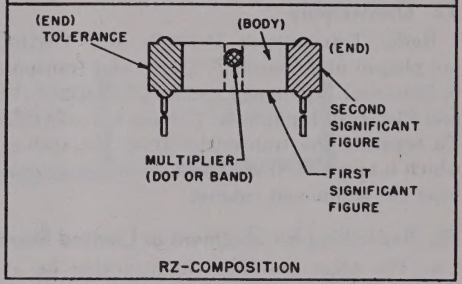

RZ-COMPOSITION

RESISTOR COLOR CODE

BAND A OR BODY*		BAND B OR END*		BAND C OR DOT OR BAND*		BAND D OR END*	
COLOR	FIRST SIGNIFICANT FIGURE	COLOR	SECOND SIGNIFICANT FIGURE	COLOR	MULTIPLIER	COLOR	RESISTANCE TOLERANCE (PERCENT)
BLACK	0	BLACK	0	BLACK	1	BODY	±20
BROWN	1	BROWN	1	BROWN	10	SILVER	±10
RED	2	RED	2	RED	100	GOLD	±5
ORANGE	3	ORANGE	3	ORANGE	1,000		
YELLOW	4	YELLOW	4	YELLOW	10,000		
GREEN	5	GREEN	5	GREEN	100,000		
BLUE	6	BLUE	6	BLUE	1,000,000		
PURPLE (VIOLET)	7	PURPLE (VIOLET)	7				
GRAY	8	GRAY	8	GOLD	0.1		
WHITE	9	WHITE	9	SILVER	0.01		

*FOR WIRE-WOUND-TYPE RESISTORS, BAND A SHALL BE DOUBLE-WIDTH. WHEN BODY COLOR IS THE SAME AS THE DOT (OR BAND) OR END COLOR, THE COLORS ARE DIFFERENTIATED BY SHADE, GLOSS, OR OTHER MEANS.

EXAMPLES (BAND MARKING):
10 OHMS ±20 PERCENT: BROWN BAND A; BLACK BAND B; BLACK BAND C; NO BAND D.
4.7 OHMS ±5 PERCENT: YELLOW BAND A; PURPLE BAND B; GOLD BAND C; GOLD BAND D.

EXAMPLES (BODY MARKING):
10 OHMS ±20 PERCENT: BROWN BODY; BLACK END; BLACK DOT OR BAND; BODY COLOR ON TOLERANCE END.
3,000 OHMS ±10 PERCENT: ORANGE BODY; BLACK END; RED DOT OR BAND; SILVER END.

STD-R1

Figure 46. Resistor color codes.

CHAPTER 7

SHIPMENT AND LIMITED STORAGE AND DEMOLITION TO PREVENT ENEMY USE

Section I. SHIPMENT AND LIMITED STORAGE

77. Disassembly

Radio Transmitters T–278/U and T–416/GR are plug-in units normally stored and transported in Electrical Equipment Cabinet CY–938(*)/VRC and Electrical Equipment Cabinet CY–1221(*)/G. To separate the transmitter from the system in which it operates, it is necessary only to remove it from the equipment cabinet.

78. Repacking for Shipment or Limited Storage

a. The exact procedure in repacking for shipment or limited storage depends on the material available and the conditions under which the equipment is to be shipped or stored. Normally, the transmitter will be housed in Electrical Equipment Cabinet CY–938(*)/VRC or Electrical Equipment Cabinet CY–1221(*)/G for storage.

b. When repacking the equipment, it should be inclosed in a protected carton placed within a wooden case. Whenever practicable, place a dehydrating agent, such as silica gel, inside the inner carton. Protect the inner carton with a waterproof paper barrier. Seal the seams of the paper barrier with waterproof sealing compound or tape. Pack the protected carton in a padded wooden case; provide at least 3 inches of excelsior padding between the paper barrier and the packing case.

Section II. DEMOLITION OF MATERIEL TO PREVENT ENEMY USE

79. General

The demolition procedures outlined in paragraph 80 will be used to prevent the enemy from using or salvaging this equipment. Demolition of the equipment will be accomplished only upon the order of the commander.

80. Methods of Destruction

a. Smash. Smash the crystals, controls, tubes, coils, switches, capacitors, and transformers; use sledges, axes, handaxes, hammers, crowbars, or other heavy tools.

b. Cut. Cut cords and wiring; use axes, handaxes, or machetes.

c. Burn. Burn cords, resistors, capacitors, coils, wiring, and technical manuals; use gasoline, kerosene, oil, flame throwers, or incendiary grenades.

d. Bend. Bend panels, cabinet, and chassis.

e. Explode. If explosives are necessary, use firearms, grenades, or TNT.

f. Dispose. Bury or scatter the destroyed parts in slit trenches, fox holes, or other holes, or throw them into streams.

g. Destroy. Destroy everything.

RESISTOR COLOR CODE MARKING

(MIL-STD RESISTORS)

AXIAL-LEAD RESISTORS (INSULATED)

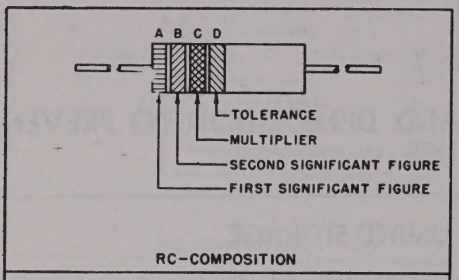

RC-COMPOSITION

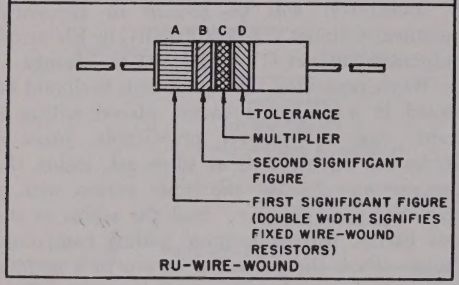

RU-WIRE-WOUND

RADIAL-LEAD RESISTORS (UNINSULATED)

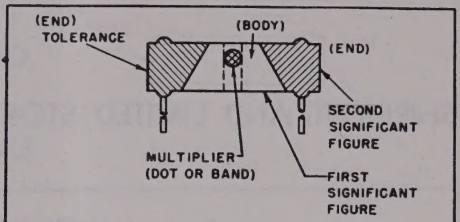

RZ-COMPOSITION

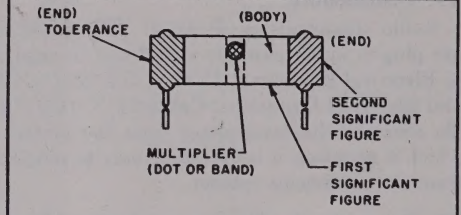

RZ-COMPOSITION

RESISTOR COLOR CODE

BAND A OR BODY*		BAND B OR END*		BAND C OR DOT OR BAND*		BAND D OR END*	
COLOR	FIRST SIGNIFICANT FIGURE	COLOR	SECOND SIGNIFICANT FIGURE	COLOR	MULTIPLIER	COLOR	RESISTANCE TOLERANCE (PERCENT)
BLACK	0	BLACK	0	BLACK	1	BODY	± 20
BROWN	1	BROWN	1	BROWN	10	SILVER	± 10
RED	2	RED	2	RED	100	GOLD	± 5
ORANGE	3	ORANGE	3	ORANGE	1,000		
YELLOW	4	YELLOW	4	YELLOW	10,000		
GREEN	5	GREEN	5	GREEN	100,000		
BLUE	6	BLUE	6	BLUE	1,000,000		
PURPLE (VIOLET)	7	PURPLE (VIOLET)	7				
GRAY	8	GRAY	8	GOLD	0.1		
WHITE	9	WHITE	9	SILVER	0.01		

*FOR WIRE-WOUND-TYPE RESISTORS, BAND A SHALL BE DOUBLE-WIDTH. WHEN BODY COLOR IS THE SAME AS THE DOT (OR BAND) OR END COLOR, THE COLORS ARE DIFFERENTIATED BY SHADE, GLOSS, OR OTHER MEANS.

EXAMPLES (BAND MARKING):
10 OHMS ±20 PERCENT: BROWN BAND A; BLACK BAND B; BLACK BAND C; NO BAND D.
4.7 OHMS ±5 PERCENT: YELLOW BAND A; PURPLE BAND B; GOLD BAND C; GOLD BAND D.

EXAMPLES (BODY MARKING):
10 OHMS ±20 PERCENT: BROWN BODY; BLACK END; BLACK DOT OR BAND; BODY COLOR ON TOLERANCE END.
3,000 OHMS ±10 PERCENT: ORANGE BODY; BLACK END; RED DOT OR BAND; SILVER END.

STD-RI

Figure 46. Resistor color codes.

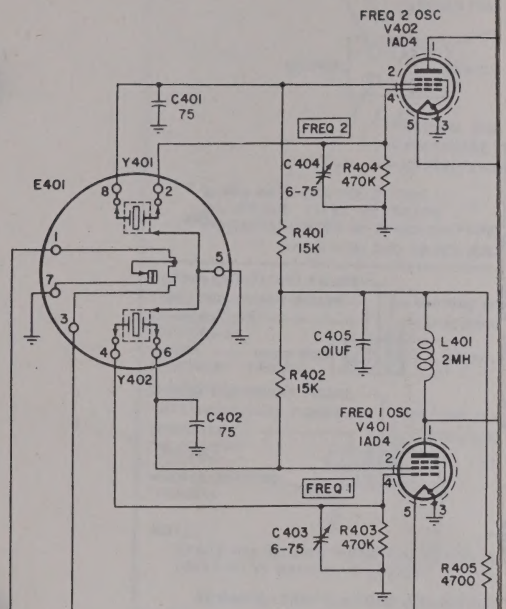

NOTES:

1. UNLESS OTHERWISE NOTED:
   ALL CAPACITANCES ARE IN UUF.
   ALL RESISTANCES ARE IN OHMS.
2. E401 AND C425A-B ARE PLUGGED INTO STANDARD 8 PIN OCTAL SOCKETS.
3. ▭ INDICATES EQUIPMENT MARKING.

P501
VIEWED FROM WIRE END

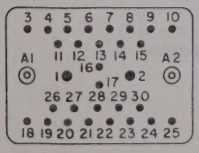

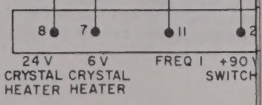

RESISTOR COLOR CODE MARKING

(MIL-STD RESISTORS)

AXIAL-LEAD RESISTORS (INSULATED)

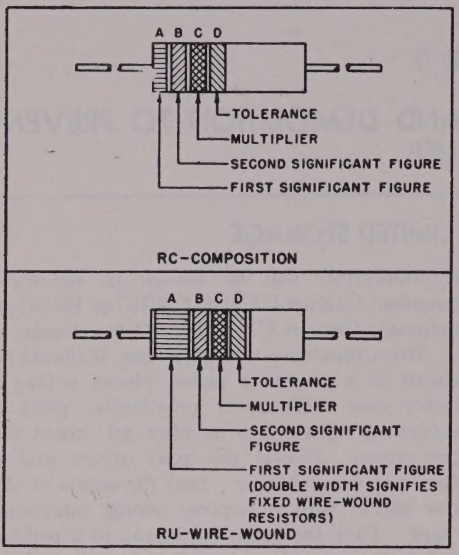

RADIAL-LEAD RESISTORS (UNINSULATED)

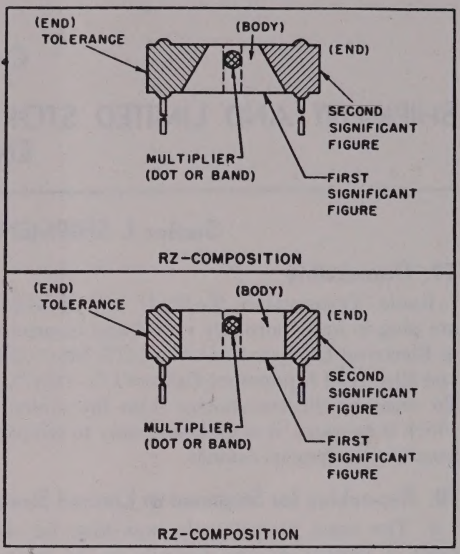

RESISTOR COLOR CODE

BAND A OR BODY*		BAND B OR END*		BAND C OR DOT OR BAND*		BAND D OR END*	
COLOR	FIRST SIGNIFICANT FIGURE	COLOR	SECOND SIGNIFICANT FIGURE	COLOR	MULTIPLIER	COLOR	RESISTANCE TOLERANCE (PERCENT)
BLACK	0	BLACK	0	BLACK	1	BODY	±20
BROWN	1	BROWN	1	BROWN	10	SILVER	±10
RED	2	RED	2	RED	100	GOLD	±5
ORANGE	3	ORANGE	3	ORANGE	1,000		
YELLOW	4	YELLOW	4	YELLOW	10,000		
GREEN	5	GREEN	5	GREEN	100,000		
BLUE	6	BLUE	6	BLUE	1,000,000		
PURPLE (VIOLET)	7	PURPLE (VIOLET)	7				
GRAY	8	GRAY	8	GOLD	0.1		
WHITE	9	WHITE	9	SILVER	0.01		

*FOR WIRE-WOUND-TYPE RESISTORS, BAND A SHALL BE DOUBLE-WIDTH. WHEN BODY COLOR IS THE SAME AS THE DOT (OR BAND) OR END COLOR, THE COLORS ARE DIFFERENTIATED BY SHADE, GLOSS, OR OTHER MEANS.

EXAMPLES (BAND MARKING):
10 OHMS ±20 PERCENT: BROWN BAND A; BLACK BAND B; BLACK BAND C; NO BAND D.
4.7 OHMS ±5 PERCENT: YELLOW BAND A; PURPLE BAND B; GOLD BAND C; GOLD BAND D.

EXAMPLES (BODY MARKING):
10 OHMS ±20 PERCENT: BROWN BODY; BLACK END; BLACK DOT OR BAND; BODY COLOR ON TOLERANCE END.
3,000 OHMS ±10 PERCENT: ORANGE BODY; BLACK END; RED DOT OR BAND; SILVER END.

STD-R1

Figure 46. Resistor color codes.

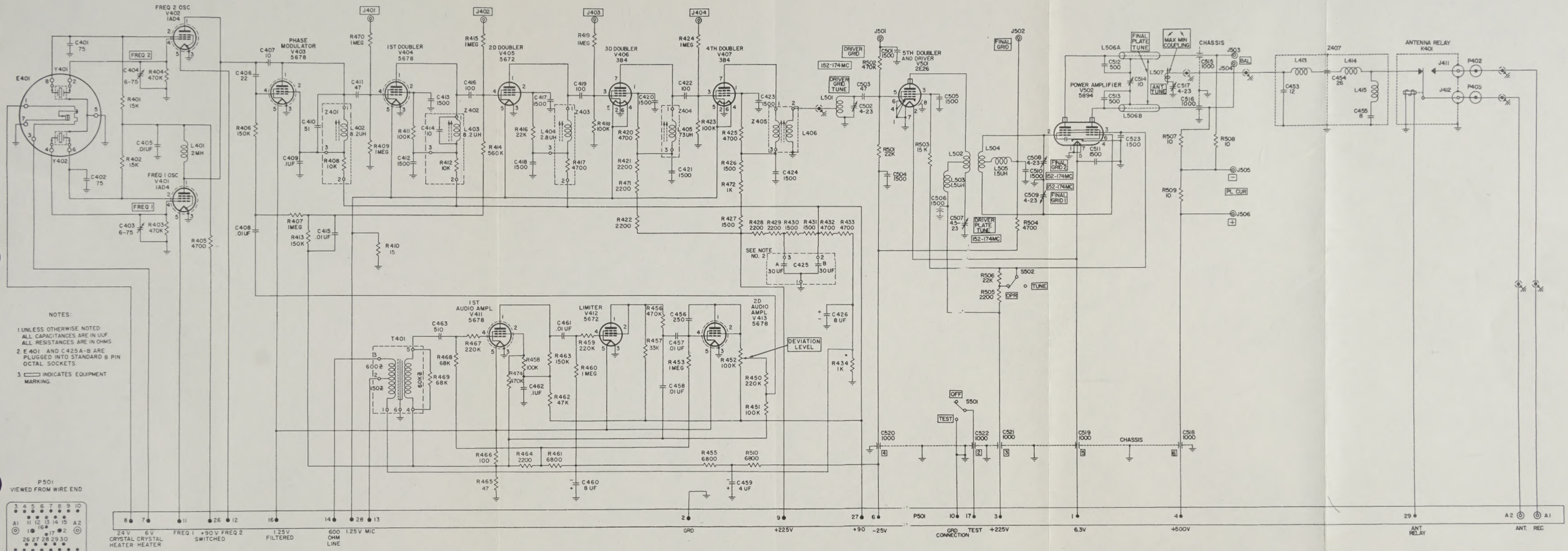

Figure 49. Radio Transmitter T-416/GR, schematic diagram.

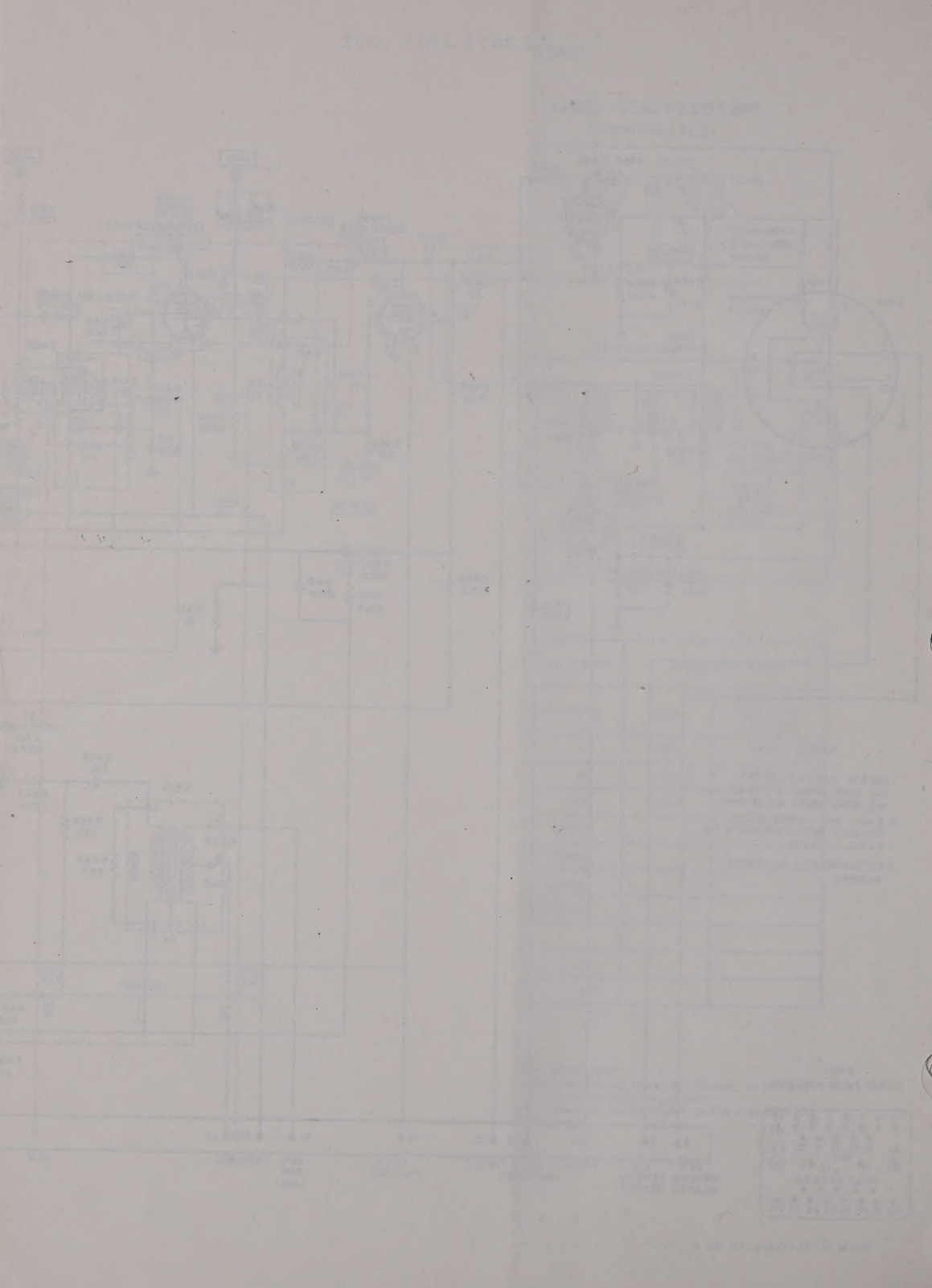

CAPACITOR COLOR CODE MARKING
(MIL-STD CAPACITORS)

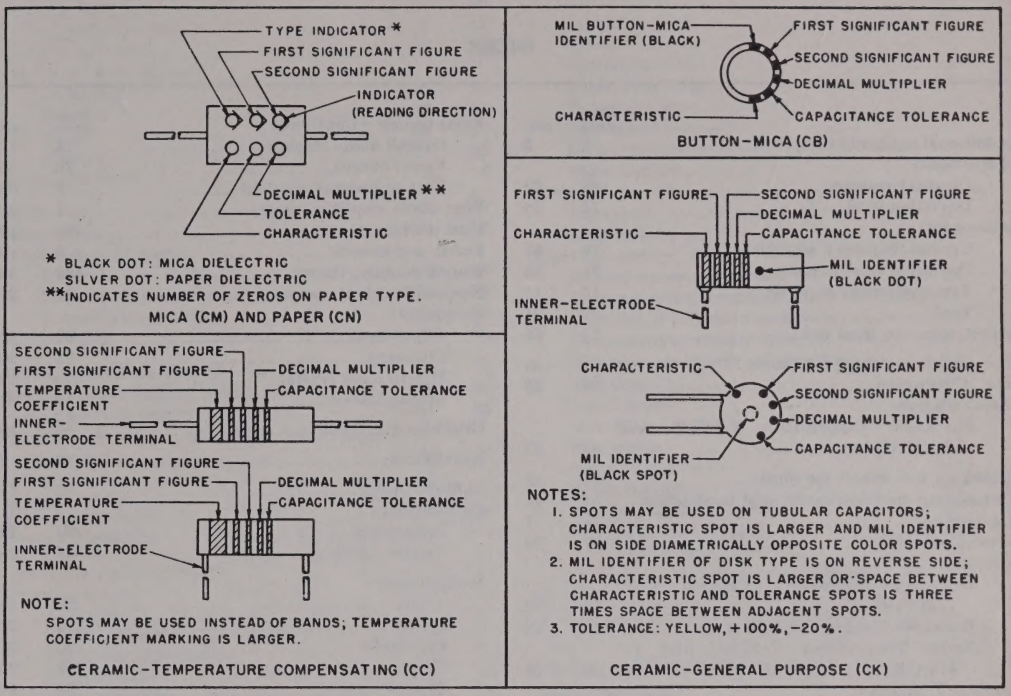

CAPACITOR COLOR CODE

COLOR	SIG FIG.	MULTIPLIER		CHARACTERISTIC[1]				TOLERANCE[2]					TEMPERATURE COEFFICIENT (UUF/UF/°C)
		DECIMAL	NUMBER OF ZEROS	CM	CN	CB	CK	CM	CN	CB	CC		
											OVER 10UUF	10UUF OR LESS	CC
BLACK	0	1	NONE		A			20	20	20	20	2	ZERO
BROWN	1	10	1	B	E	B	W				1		-30
RED	2	100	2	C	H		X	2		2	2		-80
ORANGE	3	1,000	3	D	J	D			30				-150
YELLOW	4	10,000	4	E	P								-220
GREEN	5		5	F	R						5	0.5	-330
BLUE	6		6		S								-470
PURPLE (VIOLET)	7		7		T	W							-750
GRAY	8		8			X						0.25	+30
WHITE	9		9								10	1	-330(±500)[3]
GOLD		0.1						5		5			+100
SILVER		0.01						10	10	10			

1. LETTERS ARE IN TYPE DESIGNATIONS GIVEN IN MIL-C SPECIFICATIONS.
2. IN PERCENT, EXCEPT IN UUF FOR CC-TYPE CAPACITORS OF 10 UUF OR LESS.
3. INTENDED FOR USE IN CIRCUITS NOT REQUIRING COMPENSATION.

STD-CI

Figure 47. Capacitor color code.

INDEX

	Paragraph	Page
Additional equipment required	9	5
Adjustment:		
Crystal frequency	69	57
Deviation level	70	58
Alinement:		
Crystal frequency adjustment	69	57
Deviation level adjustment	70	58
Test equipment required	16	11
Tool	32	21
Audio response, final test	74	59
B+ circuit, checking for shorts	61	45
B+ distribution	54	39
Block diagram:		
For Radio Transmitters T–278/U and T–416/GR	45	27
Checking B+ circuit for shorts	61	45
Component sectionalization and localization	59	44
Connections	14	7
Control circuits	57	39
Controls:		
Electrical Equipment Cabinet CY–1221(*)/G	22	19
Radio Set Control C–847/U	21	18
Radio Transmitters T–278/U and T–416/GR	20	16
Crystal Frequency:		
Adjustment	69	57
Relation to operating frequency	46*b*	29
Crystal oscillator, theory	46	29
Crystal oven, disassembly	17	12
Crystals:		
Determining required frequency	17	12
Installation	17	12
Dc resistance of transformers and coils	65	50
Demolition of materiel to prevent enemy use	79	61
Description of transmitter	7	5
Destruction, methods	80	61
Deviation:		
Final test	73	59
Level adjustment	70	58
Difference in models	10	6
Disassembly	77	61
Distortion test	75	59
Doublers	48	32
Dual frequency, choice	25	20
Equipment performance check list	43	25
Export shipment, uncrating and unpacking	6	5
Field maintenance level troubleshooting	59	44
Fifth doubler and driver, theory	48	32
Filament voltage distribution	55	39
Final testing:		
Deviation limit	73	59
Distortion	75	59
Final testing—Continued		
Overall audio response	74	59
Power output	76	59
Test equipment required	72	58
First audio amplifier, theory	51	38
First doubler, theory	48*a*	32
Forms and records	2	3
Fourth doubler, theory	48*d*	33
Frequencies, dual operating	25	20
Frequency:		
Adjustment	69	57
Changing	25	20
Determining crystal	17*e*	12
Multiplication	48	32
Grid bias distribution	56	39
Installation	13	7
Limiter, theory	52	39
Lubrication:		
Precautions	39*e*	24
Requirements	38	24
Maintenance:		
Arctic	39*c*	24
Desert	39*d*	24
Preventive	33	21
Tropical	39*b*	24
Troubleshooting	59	44
Measurement of resistance	63	45
Multiplication, frequency	48	32
Nomenclature, official	1	3
Operating frequency, selection	25	20
Operation:		
Arctic climates	28	20
Desert climates	30	20
Frequency changing	25	20
Preliminary adjustment	17	12
Preliminary starting	23	20
Starting	24	20
Stopping	26	20
Tropical climates	29	20
Tuning	18	13
Operational test	62	45
Organizational maintenance:		
General	41	24
Procedures:		
Using equipment performance check list	43	25
Visual inspection	42	25
Output stage, theory	50	36
Packaging data	6	5
Painting	40	24
Patch cord	32*b*	21
Phase modulator, theory	47	29
Power amplifier, theory	49	53

	Paragraph	Page
Power output, test	76	59
Preliminary adjustment	17	12
Preliminary starting	23	20
Preventive maintenance:		
Definition	33	21
Exterior	36	22
Forms	35	22
Interior	37	22
Purpose and use	3	4
Refinishing	68	57
Repacking	78	61
Replacement of parts:		
General	66	54
Power-amplifier tube	67*a*	54
Subminiature tubes	67*b*	54
Rustproofing	40	24
Scope, of technical manual	1	3
Second audio amplifier, theory	53	39
Second doubler, theory	48*b*	32
Service upon receipt of used or reconditioned equipment	15	11
Siting	11	7
Spares, running	8	5
Stopping procedure	26	20
System application	4	4
Technical characteristics	5	4
Test equipment:		
Alinement	18	13
Crystal frequency adjustment	69	57
Deviation adjustment	70	58
Final testing	72	58
Troubleshooting	60	45
Theory:		
Crystal oscillator	46	29
Fifth doubler and driver	48*e*	33
First audio amplifier	51	38
First doubler	48*a*	32
Fourth doubler	48*d*	33
Limiter	52	39
Output circuits	50	36
Phase modulator	47	29
Power amplifier	49	35
Second audio amplifier	53	39
Second doubler	48*b*	32
Third doubler	48*c*	32
Tools:		
Alinement	32	21
Maintenance	31	21
Troubleshooting:		
At field maintenance level	57 to 65	39
At organizational maintenance level	31 to 43	21
Checking B+ circuits for shorts	61	45
Component sectionalization	59*a*	44
Dc resistance of coils and transformers	65	50
Isolation	59*b*	44
Localization	59*c*	44
Operational test	62	45
Procedures	59	44
Repair precautions	66	54
Sectionalization	59*a*	44
Test equipment required	60	45
Troubleshooting chart	62	45
Visual inspection	42	25
Voltage and resistance measurements	63	45
Tuning	18	13
Uncrating, unpacking, and checking new equipment	12	7
Use of preventive maintenance form	35	22
Weatherproofing:		
Arctic maintenance	39*c*	24
Desert maintenance	39*d*	24
General	39*a*	24
Tropical maintenance	39*b*	24

[AG 413.44 (8 Dec 54)]